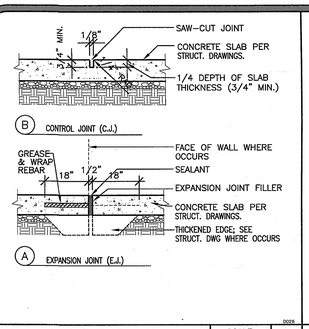

CONC. SLAB JOINTS — SCALE: 1"=1'-0" — 1

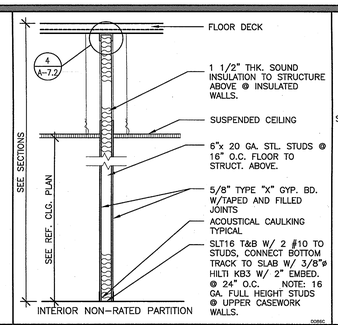

INT. WALL CONSTRUCTION — SCALE: 1/2"=1'-0" — 3

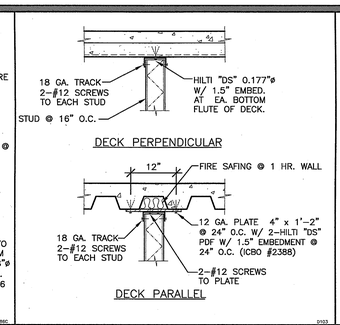

ATTACHMENT — SCALE: 3/4"=1'-0" — 4

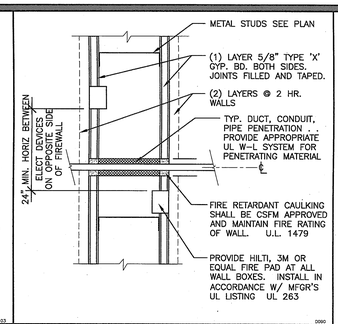

FIRE RATED WALL PENETRATIONS — SCALE: 3"=1'-0" — 5

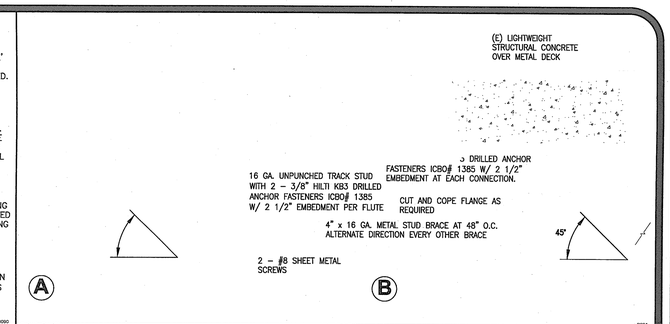

DIAGONAL BRACE SUPPORT — SCALE: 3"=1'-0" — 7

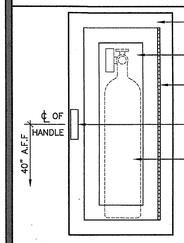

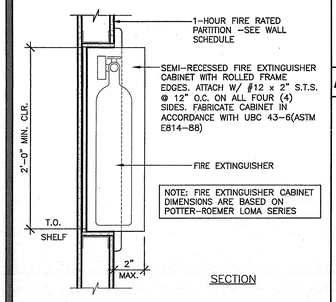

NOTE: FIRE EXTINGUISHER CABINET DIMENSIONS ARE BASED ON POTTER-ROEMER LOMA SERIES

1. PROVIDE PORTABLE FIRE EXTINGUISHER PER ANSI/NFPA 10 AND ANSI/NFPA 711 REQUIREMENTS.
2. ALLOWABLE TRAVEL DISTANCE BETWEEN FIRE EXTINGUISHERS NOT TO EXCEED 75 FEET (VERIFY LOCATION W/ FIRE MARSHAL IN FIELD PRIOR TO FRAMING).
3. REFER TO SPECIFICATIONS SECTION 10523 FOR ADDITIONAL INFORMATION

FIRE EXTINGUISHER CAB. — SCALE: 3"=1'-0" — 15

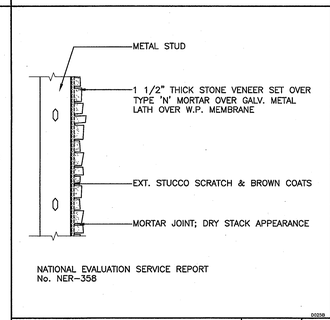

ADHEARED VENEER DETAIL — SCALE: 1"=1'-0" — 9

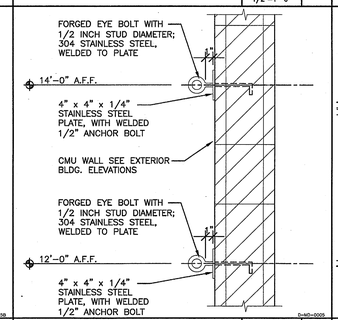

SCREEN DETAIL AT CMU — SCALE: 1 1/2"=1'-0" — 10

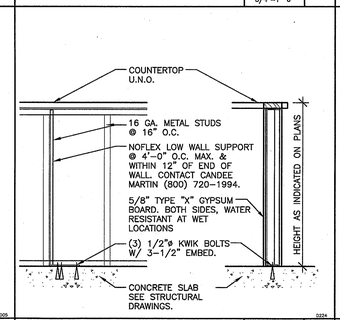

WALL SUPPORT — SCALE: 3/4"=1'-0" — 11

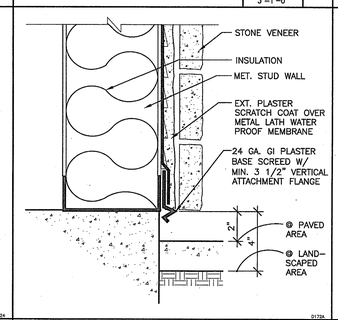

BASE PLASTER SCREED — SCALE: 3"=1'-0" — 12

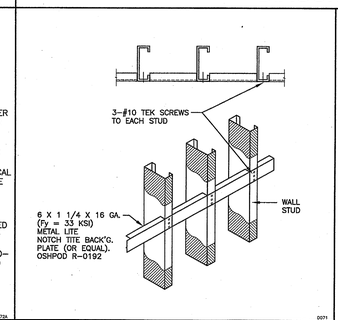

BACKING PLATE — SCALE: NO SCALE — 13

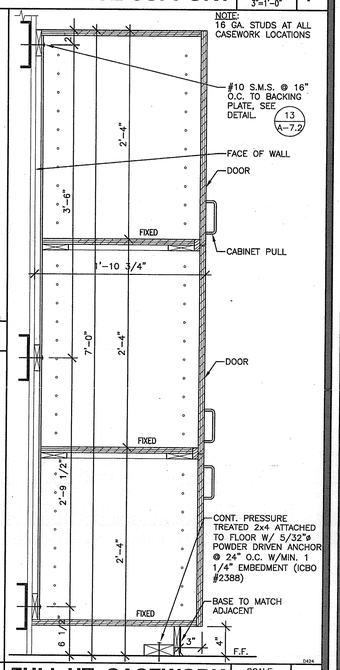

FULL HT. CASEWORK — SCALE: 1 1/2"=1'-0" — 21

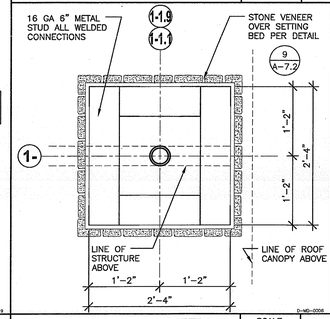

COLUMN DETAIL — SCALE: 1"=1'-0" — 16

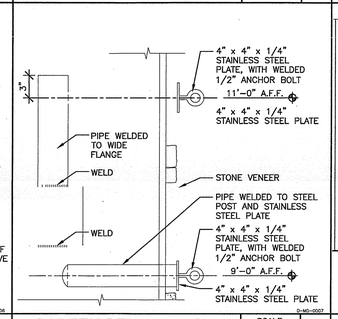

SCREEN DETAIL AT STUD — SCALE: 1 1/2"=1'-0" — 17

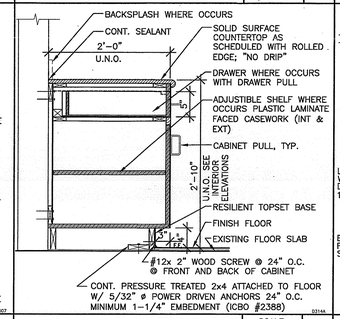

CASEWORK — SCALE: 1"=1'-0" — 18

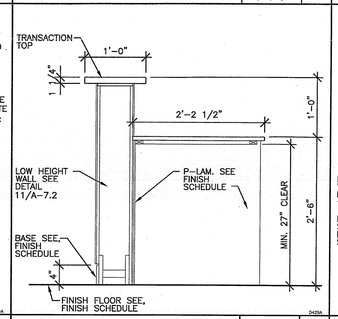

CASEWORK SECTION — SCALE: 1"=1'-0" — 19

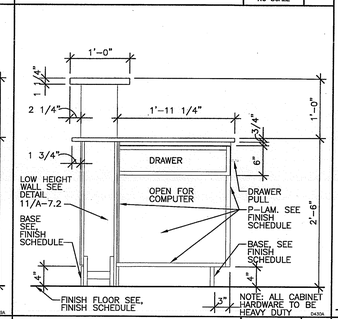

CASEWORK SECTION — SCALE: 1"=1'-0" — 20

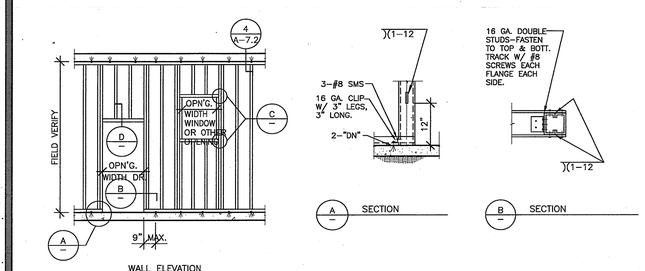

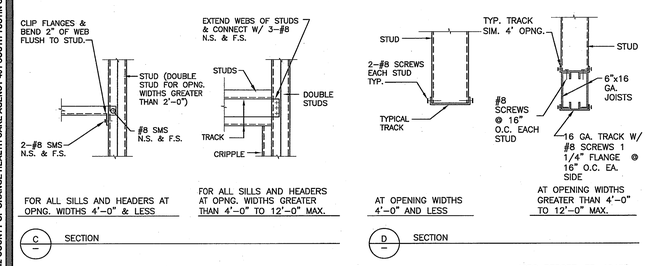

ICBO REPORT: ER-4943P

TYPICAL STUD WALL DETAILS — SCALE: NONE — 30

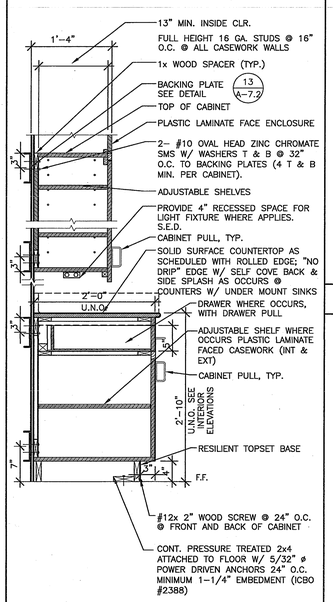

CASEWORK — SCALE: 1"=1'-0" — 31

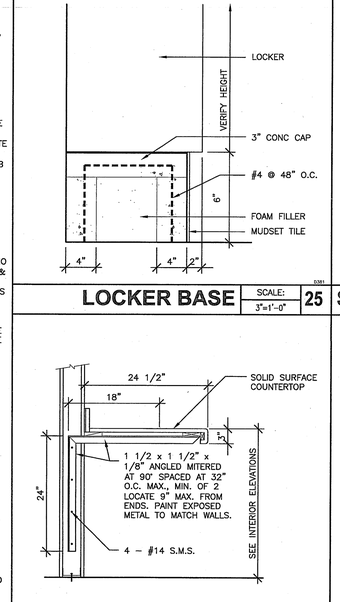

LOCKER BASE — SCALE: 3"=1'-0" — 25

STEEL SUPPORT @ COUNTER — SCALE: 1"=1'-0" — 32

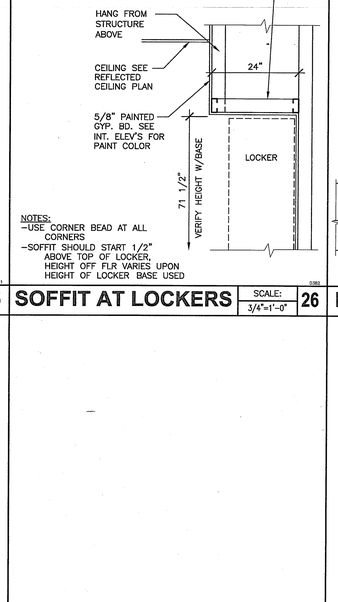

SOFFIT AT LOCKERS — SCALE: 3/4"=1'-0" — 26

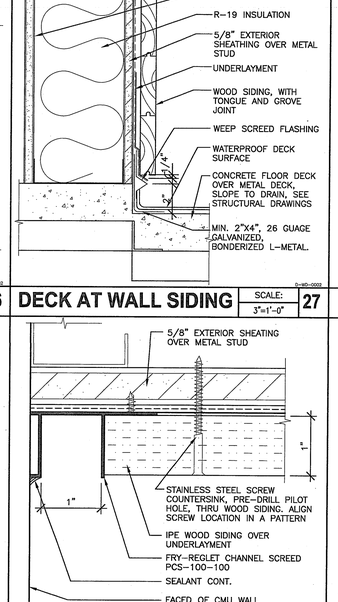

DECK AT WALL SIDING — SCALE: 3"=1'-0" — 27

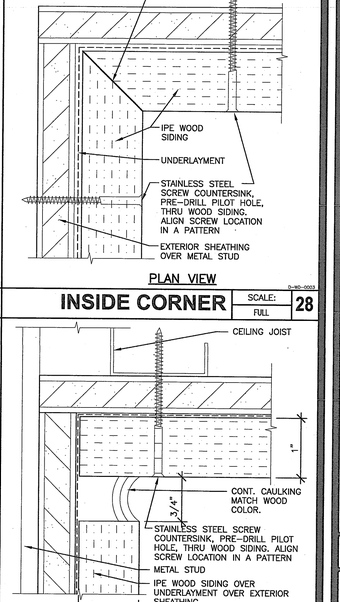

INSIDE CORNER — SCALE: FULL — 28

END DETAIL — SCALE: FULL — 34

END DETAIL @ CEILING — SCALE: FULL — 35

0742 COUNTY OF ORANGE HEALTH CARE AGENCY 401 SOUTH TUSTIN STREET

County of Orange
OC PUBLIC WORKS
Architecture & Engineering

Revisions				
0742	Sym.	Descrip.	Date	By

Consultants: Drawn. | Chkd. | Date

A-E Seal: REGISTERED ARCHITECT, KEVIN L. HIBBS, NO. CN051, REALIZED 12/31/2011, STATE OF CALIFORNIA

A-E: ALEXANDER + HIBBS, AIA, INC.
ALEXANDER + HIBBS, AIA, INC. Architecture and Planning 1000 Quail Street, Suite A Newport Beach, California 92660 (949) 476-2294

Design	DA, MS	Chkd.	AH	Date	Nov. 20, 2009

Sht Title: DETAILS
Project: COUNTY OF ORANGE HEALTH CARE AGENCY, 401 SOUTH TUSTIN STREET, 401 SOUTH TUSTIN STREET, ORANGE, CA 92866
PROJ. NO. 100-042-P210-4200

Plan No. 52333-03608

Sheet A-7.2