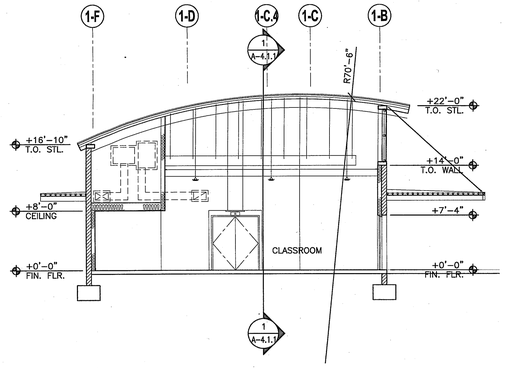

BUILDING 1 - BUILDING SECTION (CLASSROOM BLDG.) SCALE: 1/8"=1'-0" 6

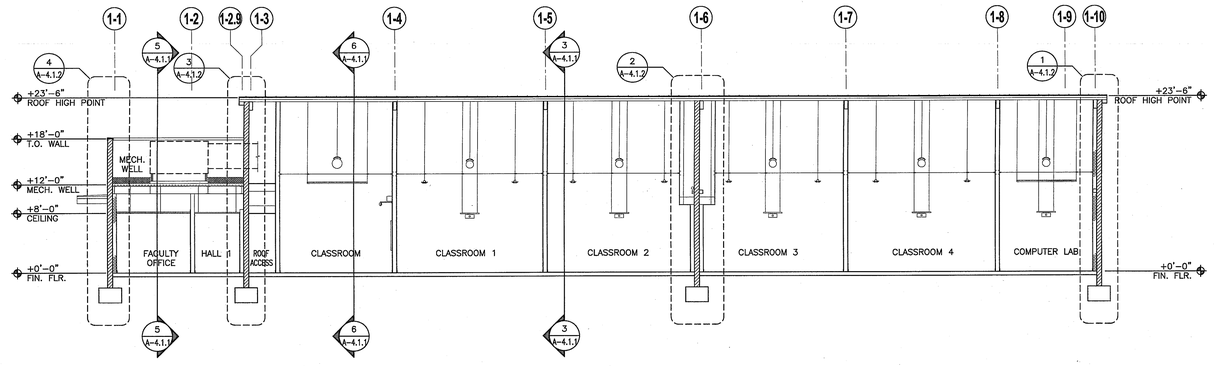

BUILDING 1 - BUILDING SECTION (CLASSROOM BLDG) SCALE: 1/8"=1'-0" 1

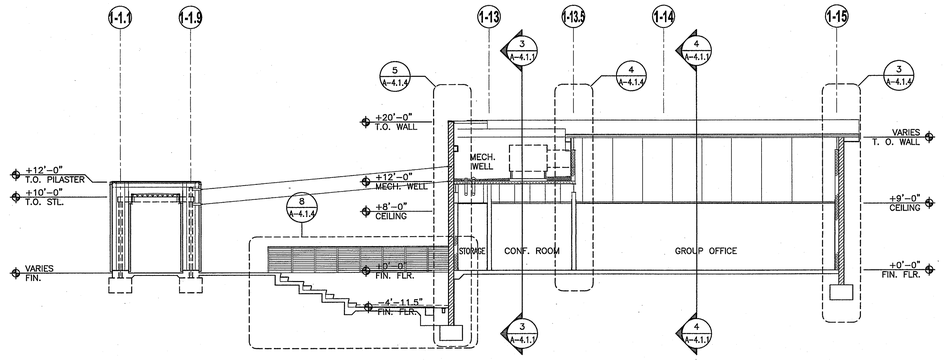

BUILDING 1 - BUILDING SECTION (STAFF BUILDING) SCALE: 1/8"=1'-0" 2

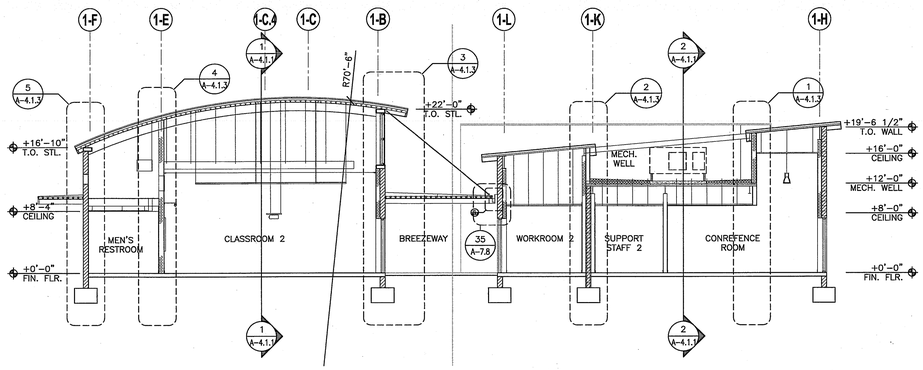

BUILDING 1 - BUILDING SECTION (CLASSROOM BLDG. AND STAFF BLDG.) SCALE: 1/8"=1'-0" 3

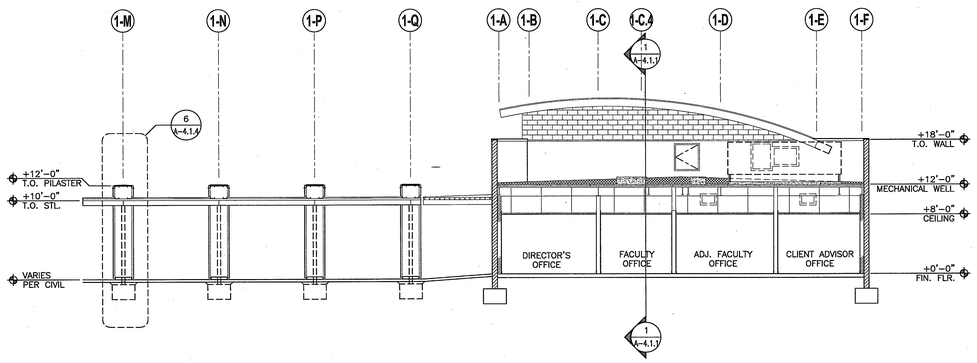

BUILDING 1 - BUILDING SECTION (CLASSROOM BLDG.) SCALE: 1/8"=1'-0" 5

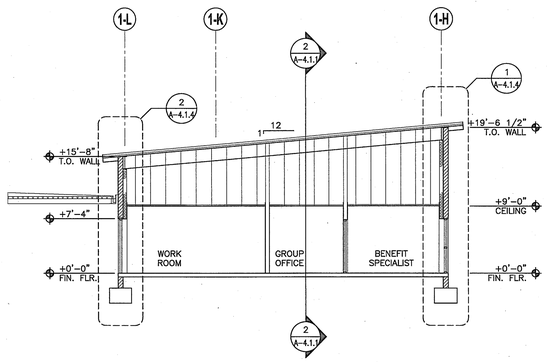

BUILDING 1 - BUILDING SECTION (STAFF BLDG.) SCALE: 1/8"=1'-0" 4

KEY PLAN

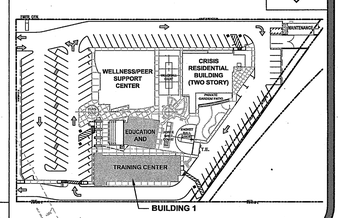

0742 COUNTY OF ORANGE HEALTH CARE AGENCY 401 SOUTH TUSTIN STREET

County of Orange
OC PUBLIC WORKS
Architecture & Engineering

Revisions			
0742	Sym.	Descrip.	Date By

Consultants

Drawn ___ Chkd. ___ Date ___

A-E Seal

A-E ALEXANDER + HIBBS, AIA, INC.

ALEXANDER + HIBBS AIA INC
Architecture and Planning
3161 W. Sunset Blvd. Suite 4
Los Angeles, 90027

Design DF Chkd. AH Date Nov. 26, 2009

Sht Title BUILDING 1 - BUILDING SECTIONS
Project COUNTY OF ORANGE HEALTH CARE AGENCY
401 SOUTH TUSTIN STREET
401 SOUTH TUSTIN STREET
ORANGE, CA 92866

PROJ. NO. 100-042-P210-4200

Plan No.
52333-03608

Sheet
A-4.1.1