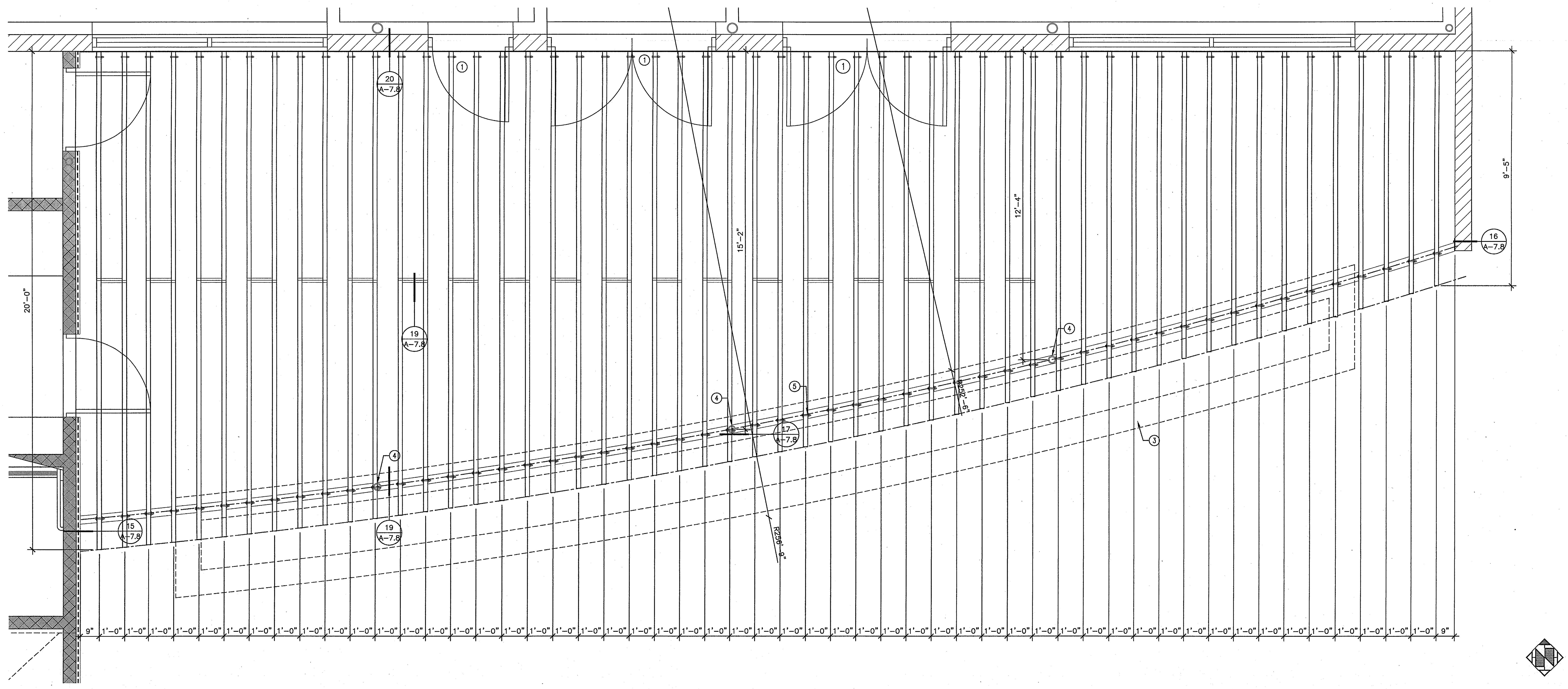

BUILDING 3 - PRIVATE GARDEN/PATIO PLAN SCALE: 1/2"=1'-0" 1

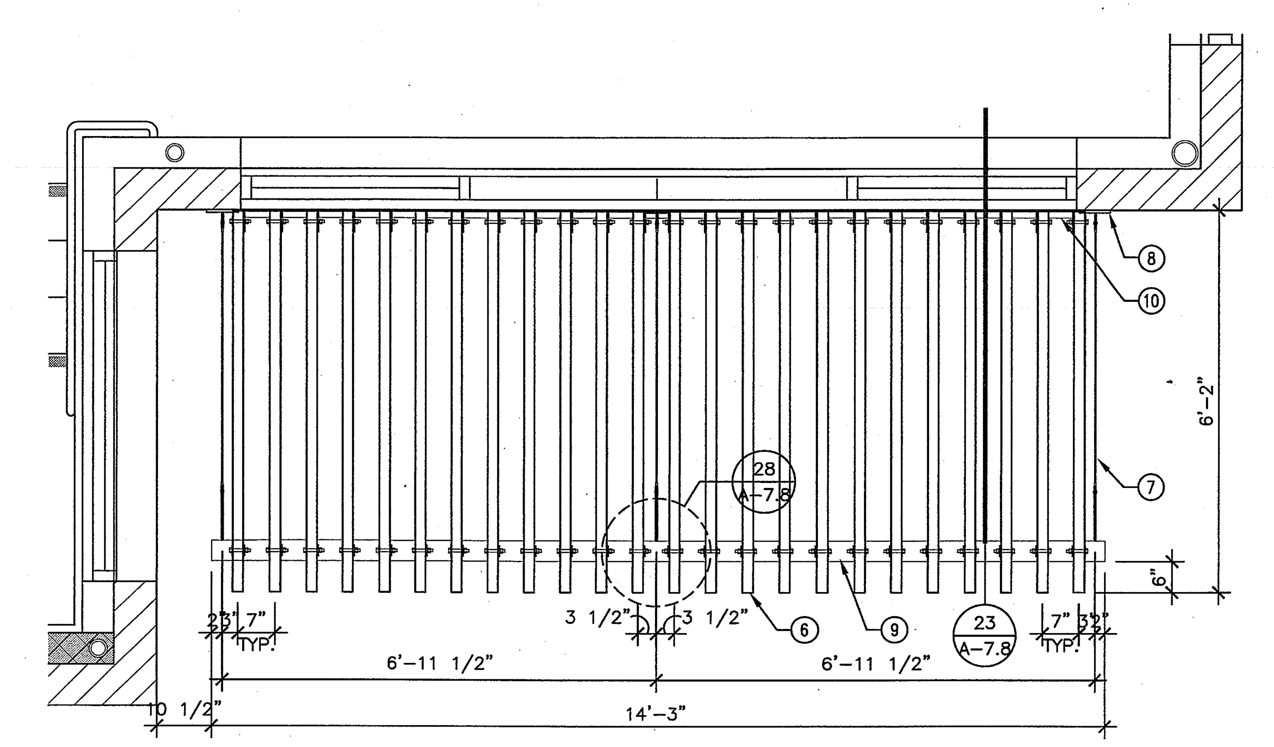

BUILDING 3 - FRONT ENTRY CANOPY SCALE: 1/2"=1'-0" 2

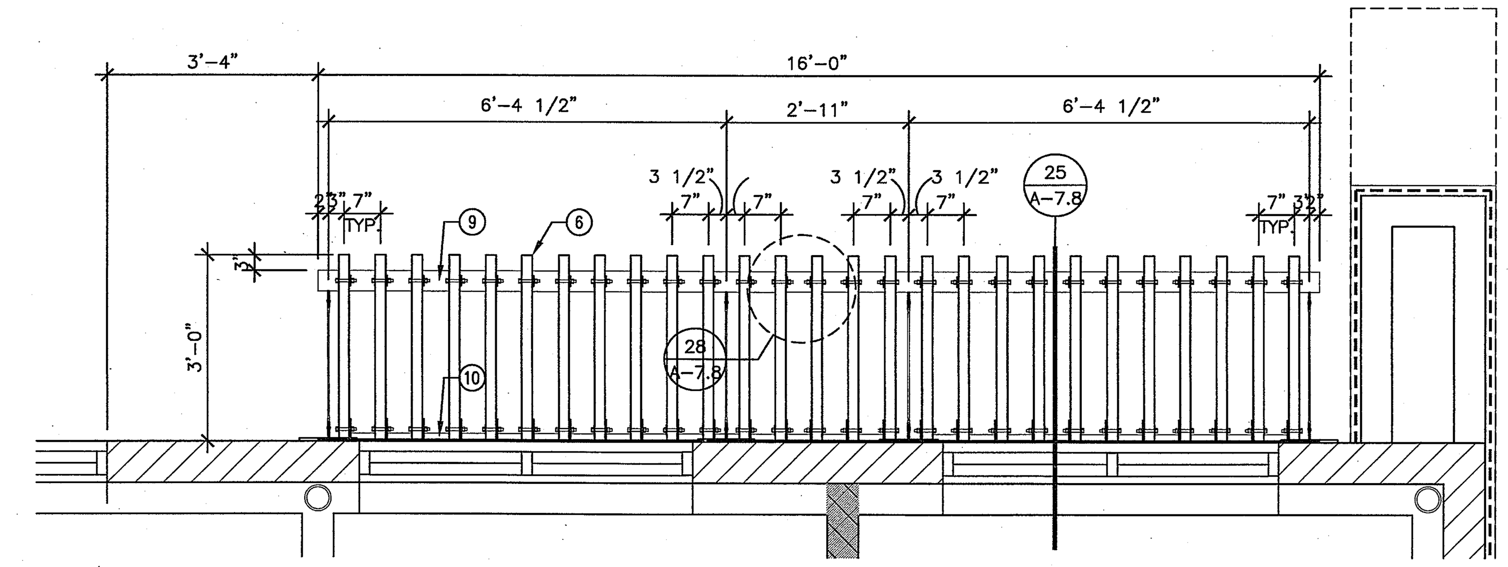

BUILDING 3 - WINDOW CANOPY SCALE: 1/2"=1'-0" 3

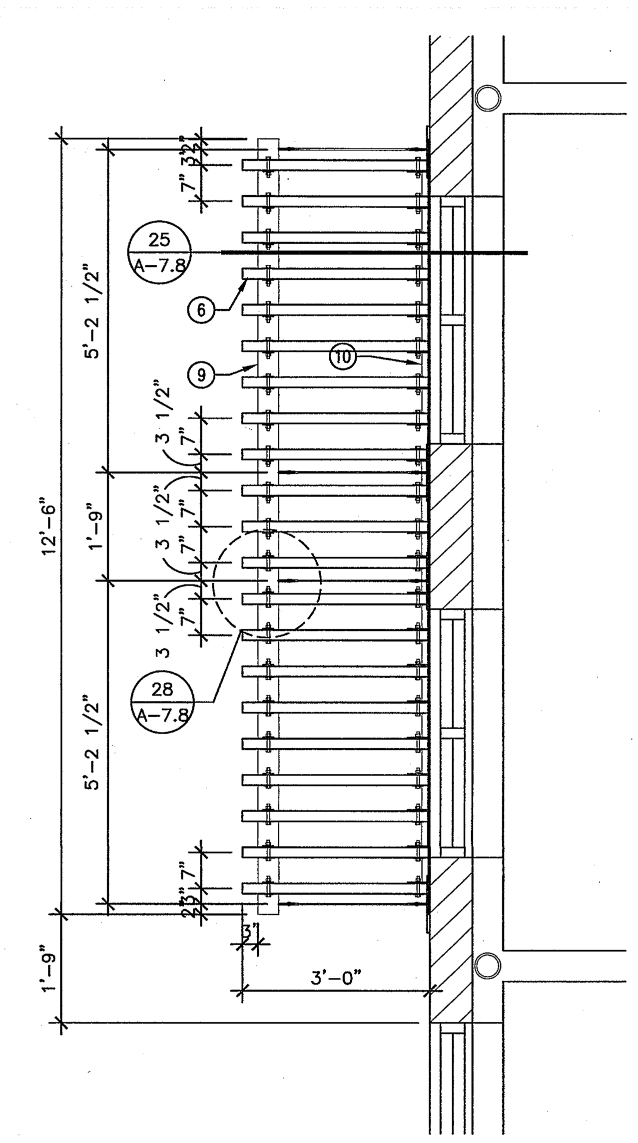

BUILDING 3 - WINDOW CANOPY SCALE: 1/2"=1'-0" 4

KEYNOTES

1. PROVIDE LEVEL LANDING AT EXIT DOORS TYP. SEE DETAIL 10/A-0.4, 11/A-0.4,18/A-0.4, AND 24/A-0.4.
2. WOOD PATIO TRELLIS ABOVE, SEE SPECIFICATION.
3. GARDEN PATIO WALL.
4. STRUCTURAL COLUMN, –. REFER TO STRUCTURAL DRAWINGS.
5. STRUCTURAL BEAM, –. REFER TO STRUCTURAL DRAWINGS.
6. EDGE OF CANOPY ABOVE, –. REFER TO STRUCTURAL DRAWINGS.
7. STAINLESS STEEL TENSION ROD, REFER TO STRUCTURAL DRAWINGS.
8. STEEL PLATE, PAINTED – REFER TO STRUCTURAL DRAWINGS.
9. STEEL TUBE, PAINTED – REFER TO STRUCTURAL DRAWINGS.
10. STEEL ANGLE PAINTED – REFER TO STRUCTURAL DRAWINGS.

KEY PLAN

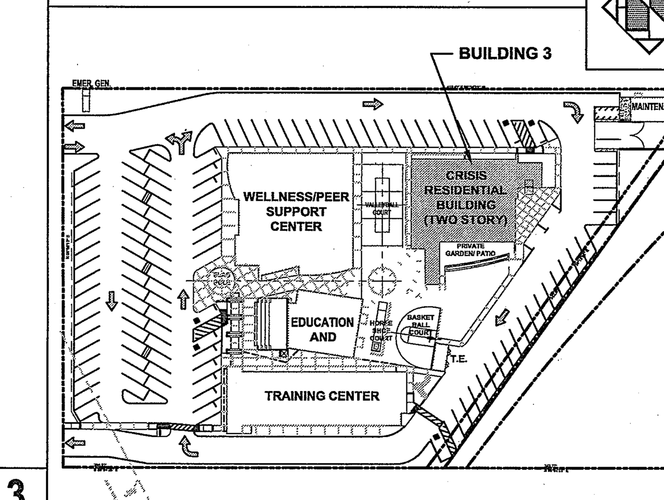

County of Orange
OC PUBLIC WORKS
Architecture & Engineering

Revisions 0742

Sym.	Descrip.	Date	By

Consultants

Drawn__ Chkd.__ Date__

A-E Seal: LICENSED ARCHITECT ALLEN L. HIBBS NO. C10511 REN.7/31/2011 STATE OF CALIFORNIA

A-E ALEXANDER + HIBBS, AIA, INC.
ALEXANDER + HIBBS AIA INC. Architecture and Planning 1200 N. JEFFERSON ST. SUITE A ANAHEIM, CALIFORNIA 92807 (714) 630-3688

Design DF, MS Chkd. AH Date Nov. 26, 2009

Sht Title BUILDING 3 - ENLARGED PLAN
Project COUNTY OF ORANGE HEALTH CARE AGENCY 401 SOUTH TUSTIN STREET
401 SOUTH TUSTIN STREET ORANGE, CA 92866
PROJ. NO. 100-042-P210-4200

Plan No. 52333-03608

Sheet A-2.3.10