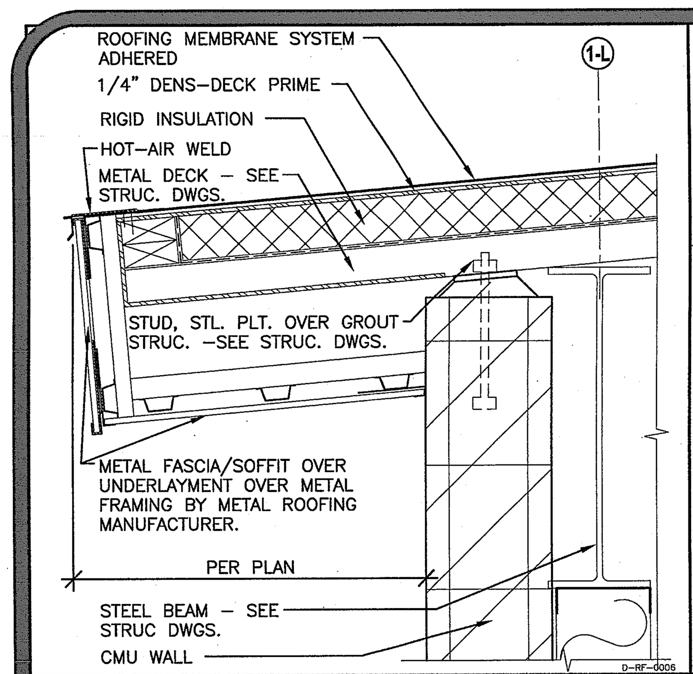

FASCIA SCALE: 1-1/2"=1'-0" 1

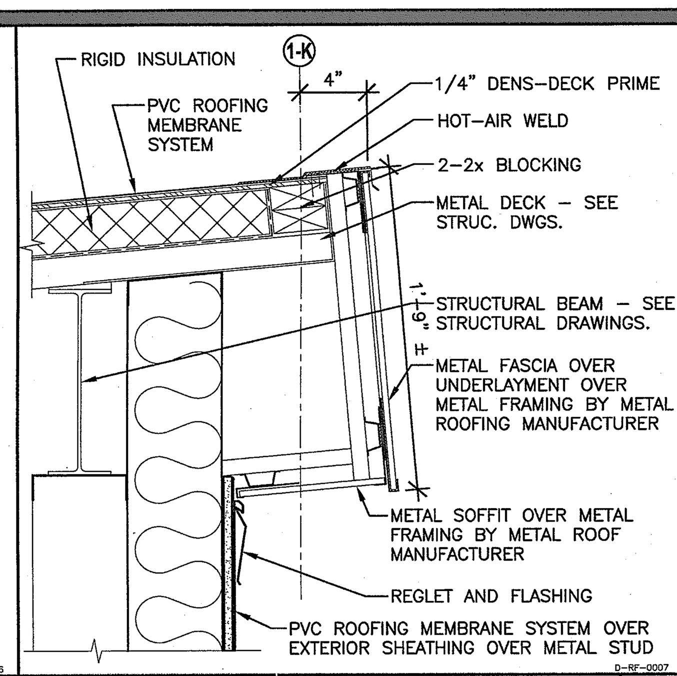

FASCIA SCALE: 1-1/2"=1'-0" 2

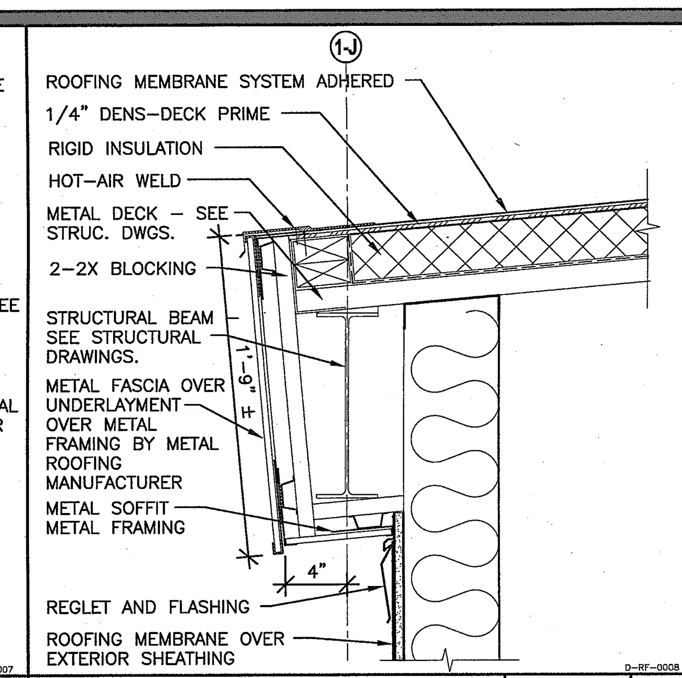

FASCIA SCALE: 1-1/2"=1'-0" 3

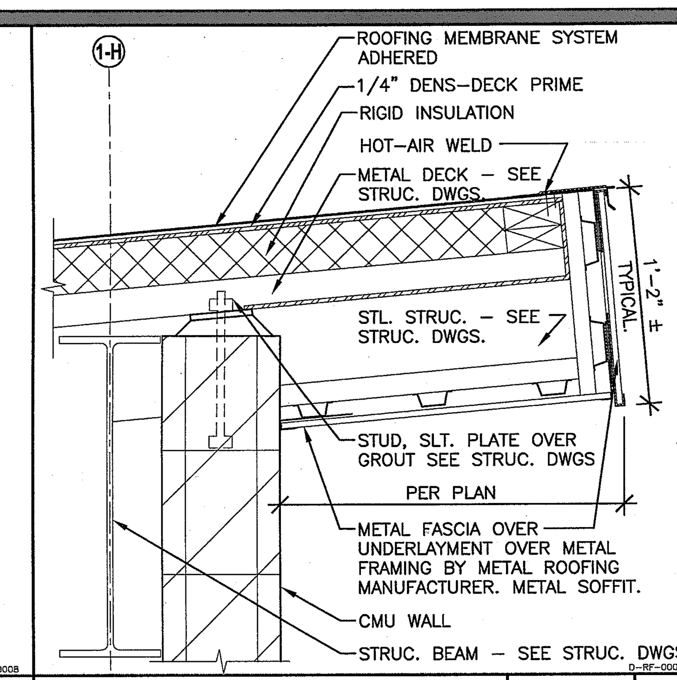

FASCIA SCALE: 1-1/2"=1'-0" 4

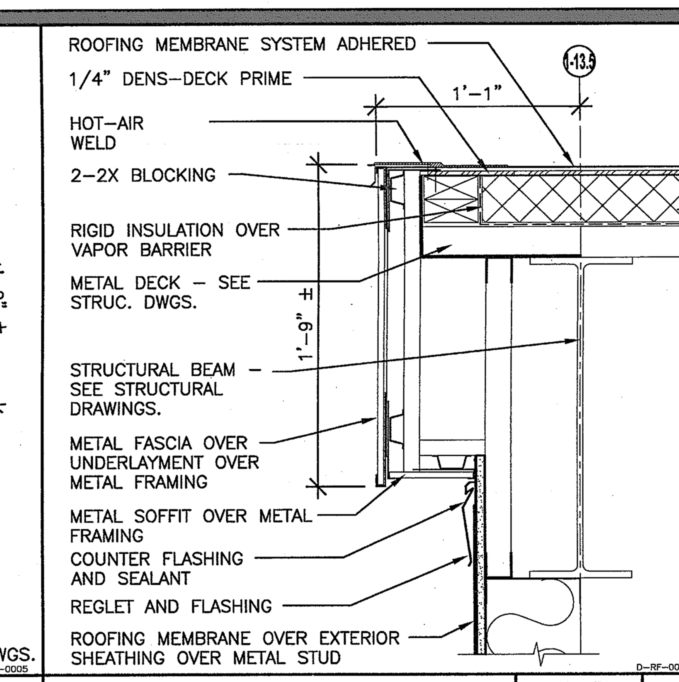

FASCIA SCALE: 1-1/2"=1'-0" 5

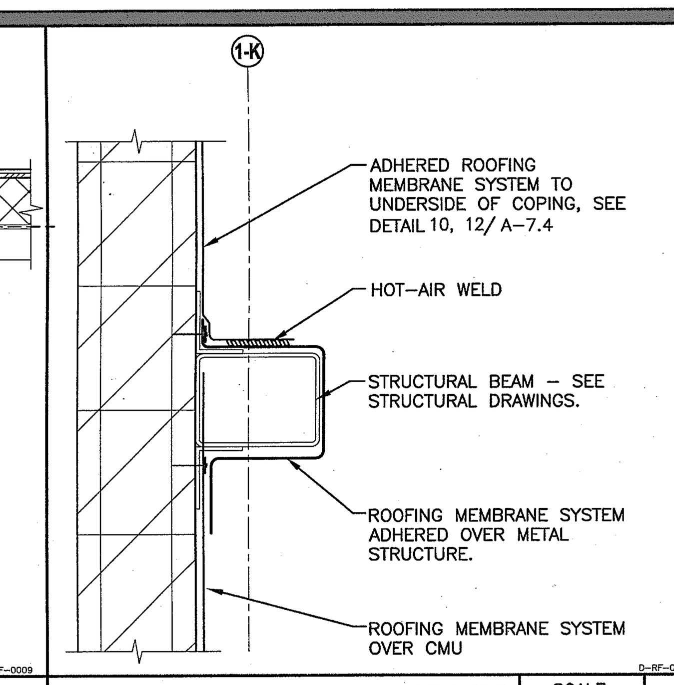

FLASHING AT BEAM SCALE: 1-1/2"=1'-0" 6

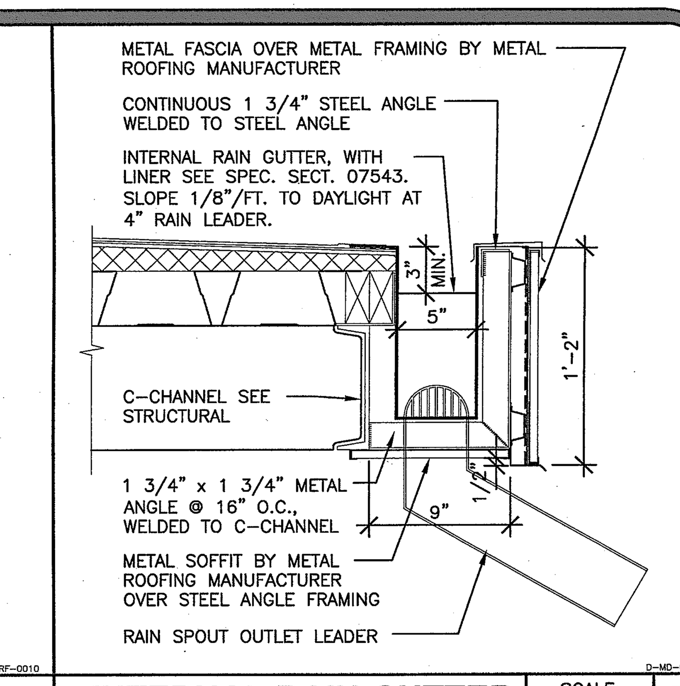

INTERNAL RAIN GUTTER SCALE: 1 1/2" 7

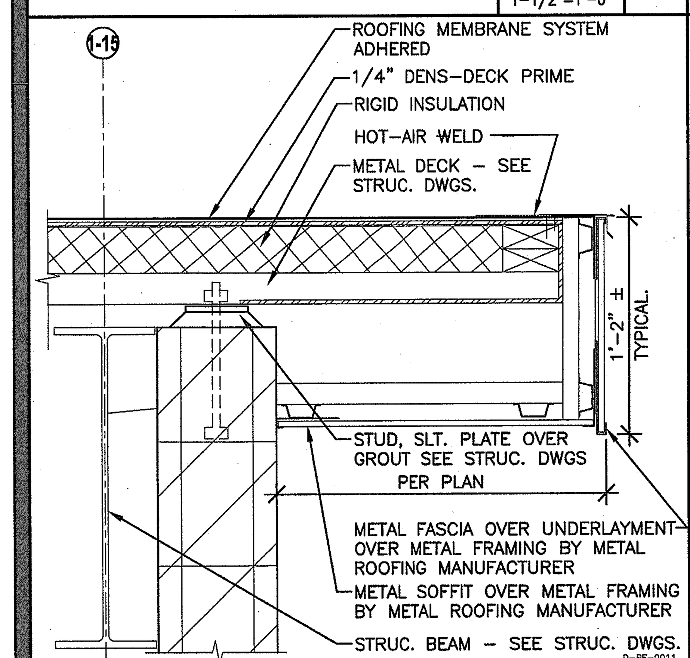

FASCIA SCALE: 1-1/2"=1'-0" 8

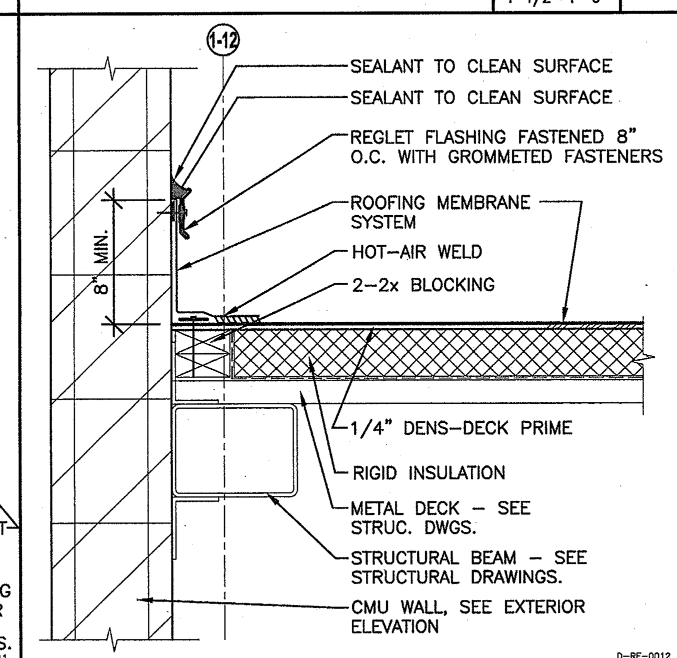

ROOFING TO CMU SCALE: 1-1/2"=1'-0" 9

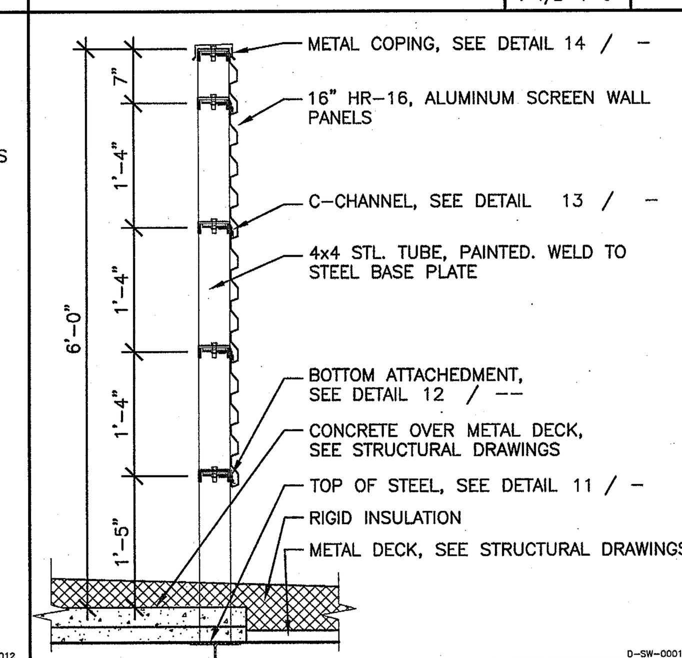

MECHANICAL SCREEN SCALE: 3/4"=1'-0" 10

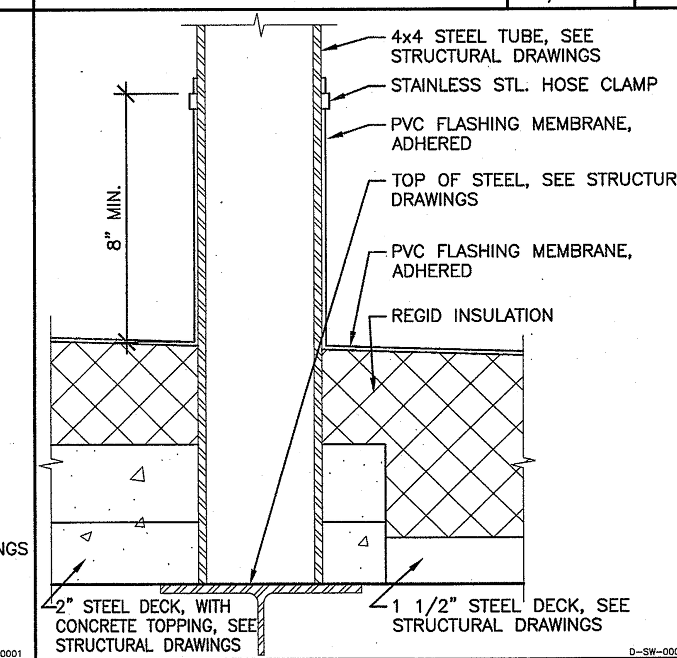

BASE PLATE SCALE: 3"=1'-0" 11

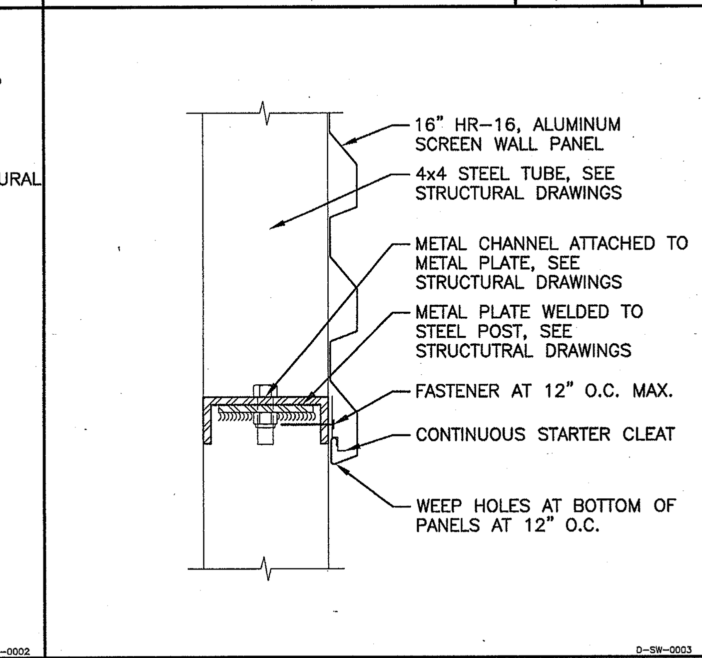

SCREEN SILL SCALE: 3"=1'-0" 12

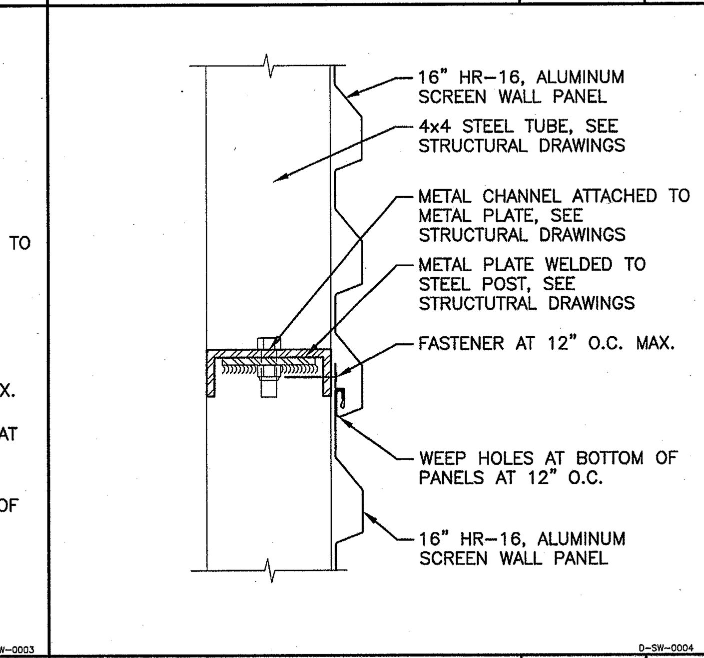

INTERMEDIATE SUPPORT SCALE: 3"=1'-0" 13

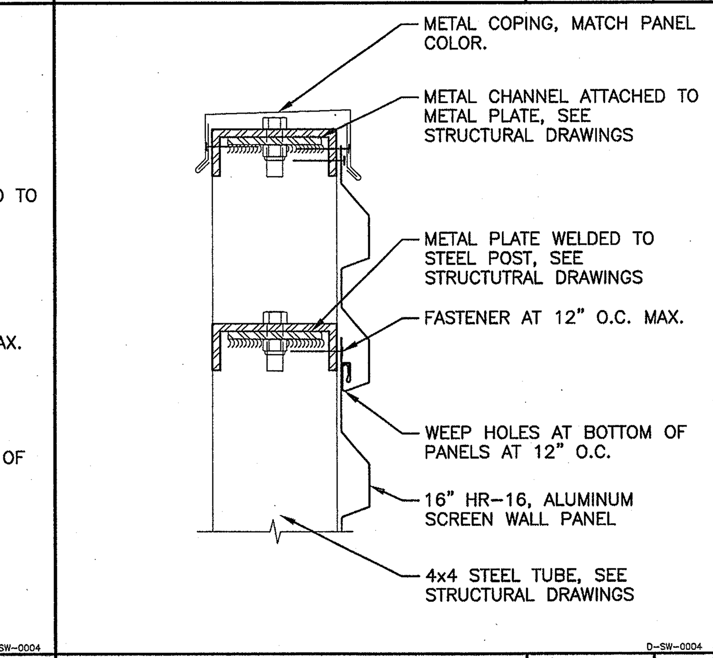

SCREEN COPING SCALE: 3"=1'-0" 14

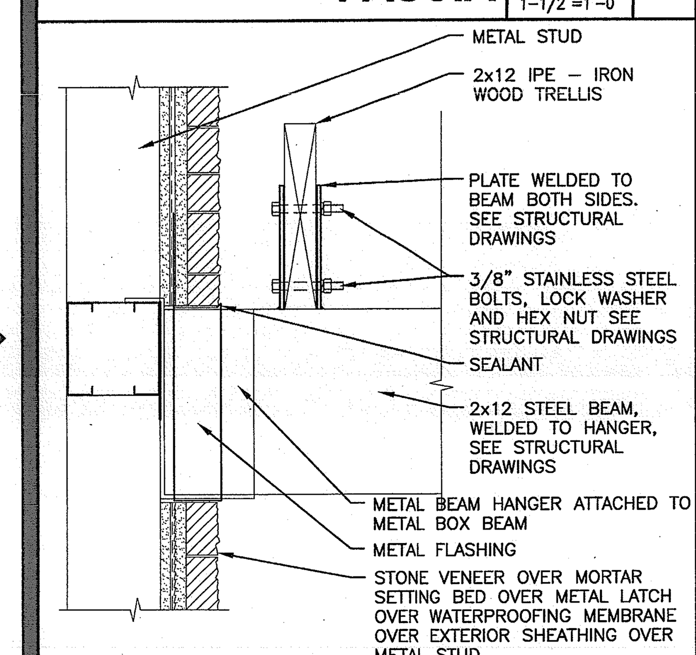

WOOD BEAM AT STONE VENEER SCALE: 1 1/2"=1'-0" 15

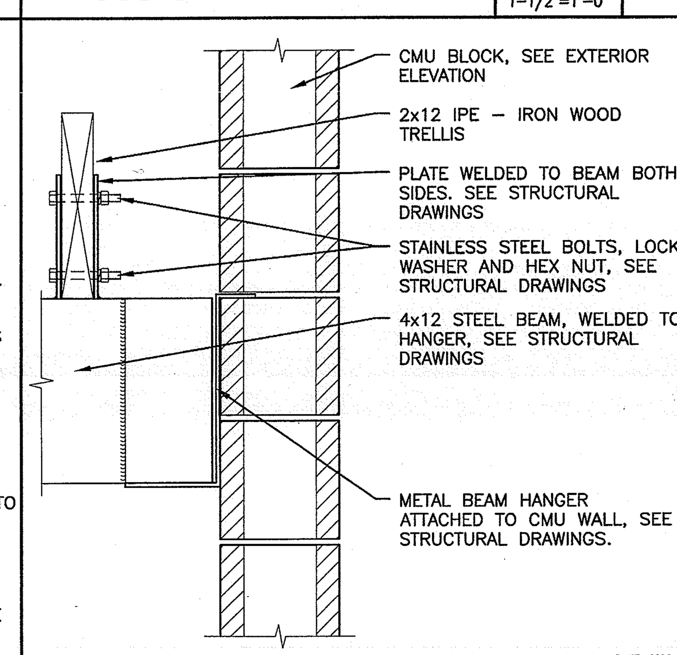

BEAM AT CMU SCALE: 1 1/2"=1'-0" 16

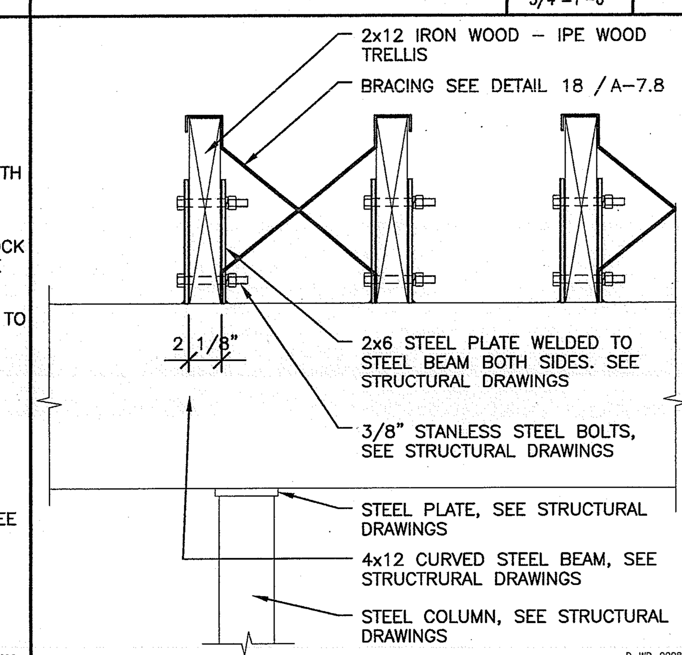

BEAM AT STEEL COLUMN SCALE: 1 1/2"=1'-0" 17

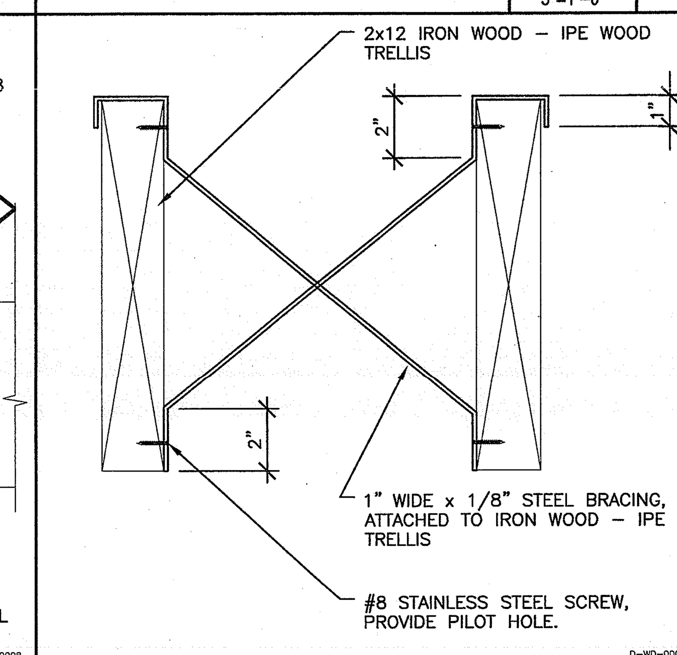

TRELLIS BRACING SCALE: 3"=1'-0" 18

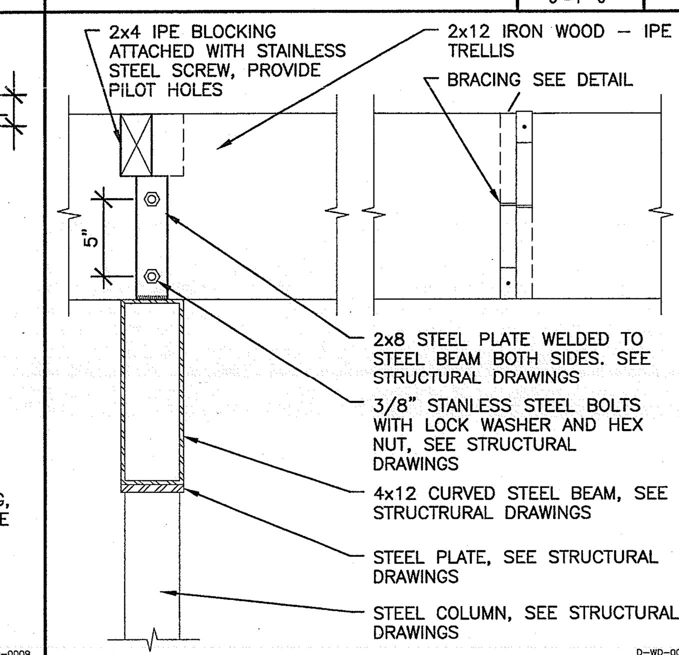

BEAM AT STEEL COLUMN SCALE: 1 1/2"=1'-0" 19

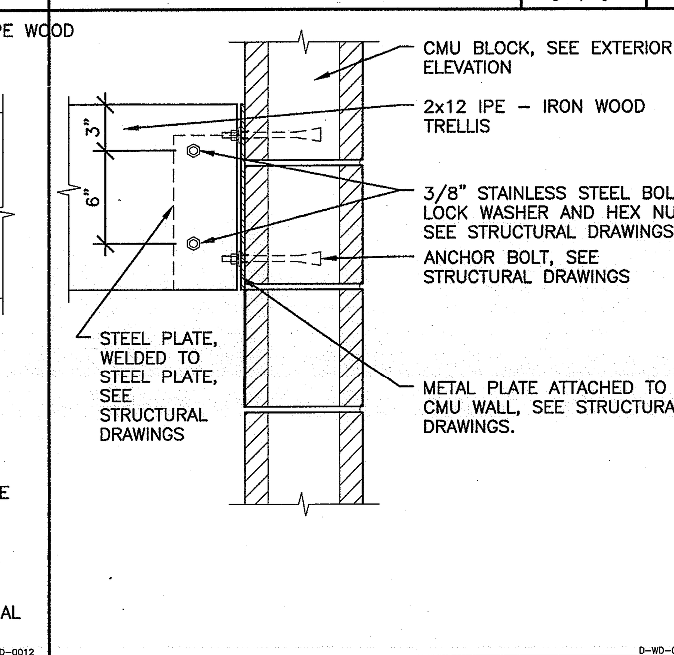

TRELLIS AT CMU SCALE: 1 1/2"=1'-0" 20

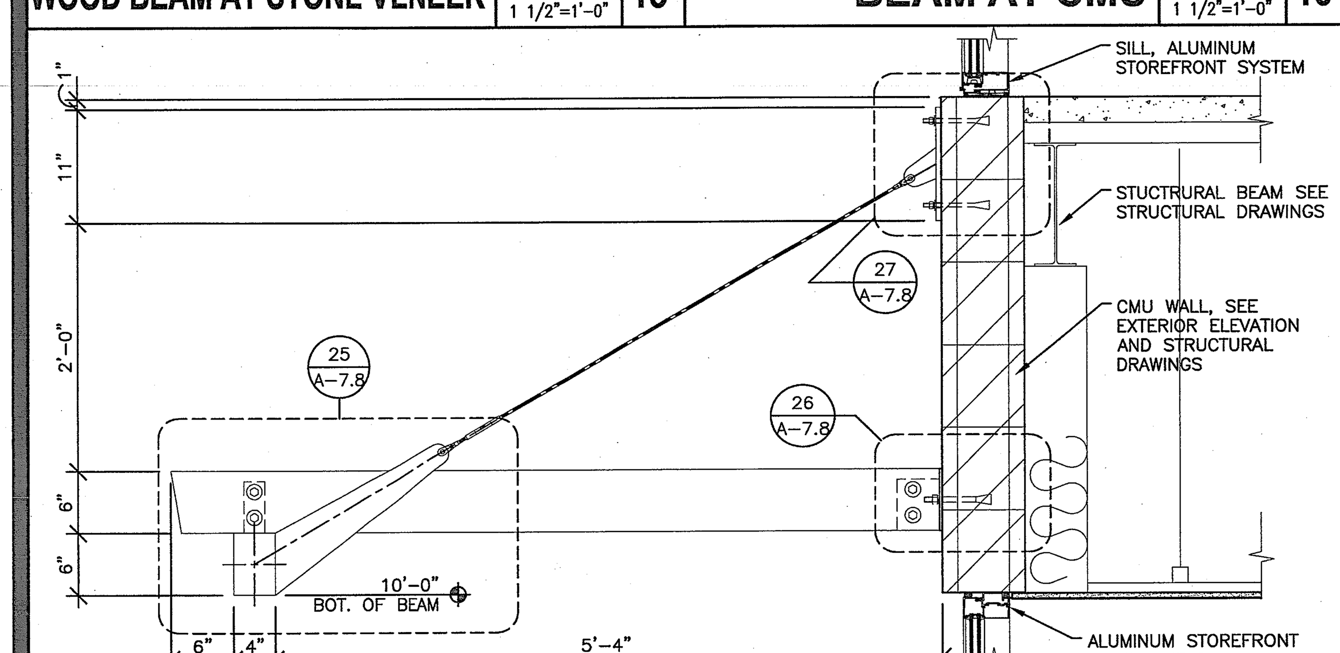

ENTRY CANOPY SCALE: 1"=1'-0" 23

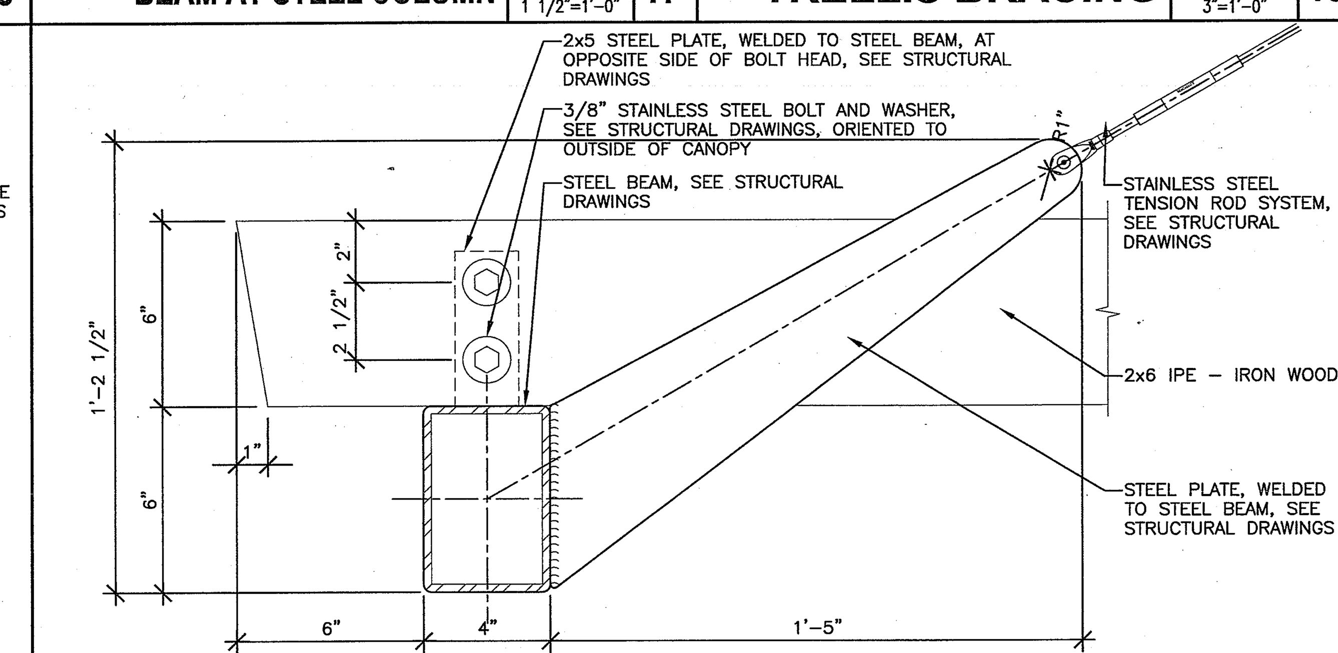

ENTRY CANOPY AT BEAM SCALE: 3"=1'-0" 25

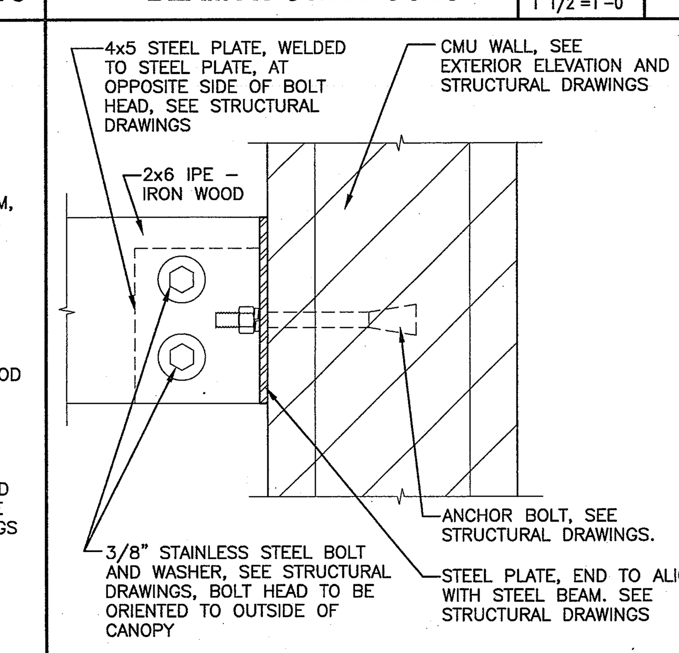

CANOPY AT CMU SCALE: 3" =1'-0" 26

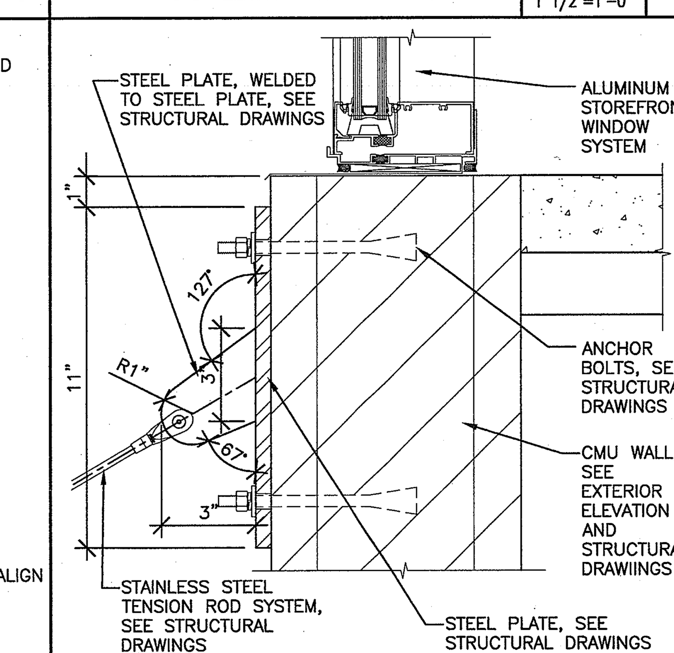

ENTRY CANOPY AT TENSION ROD SCALE: 3" =1'-0" 27

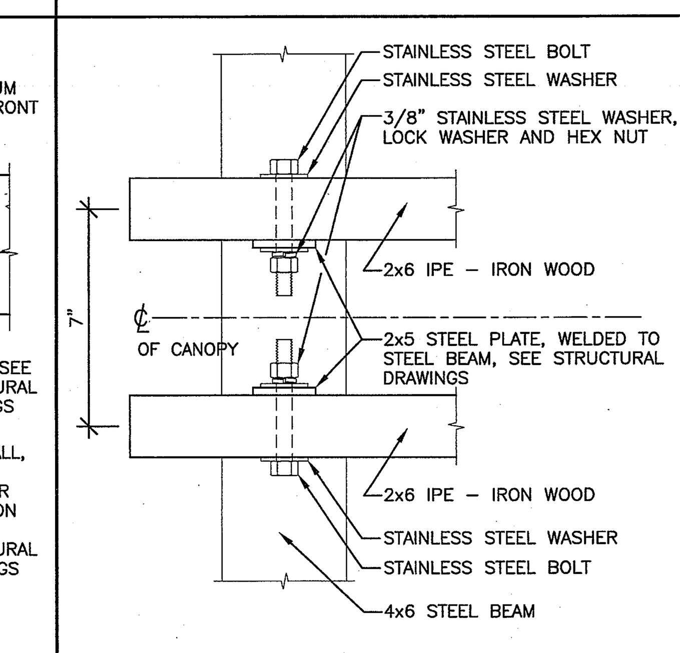

CANOPY PARTIAL PLAN SCALE: 3" =1'-0" 28

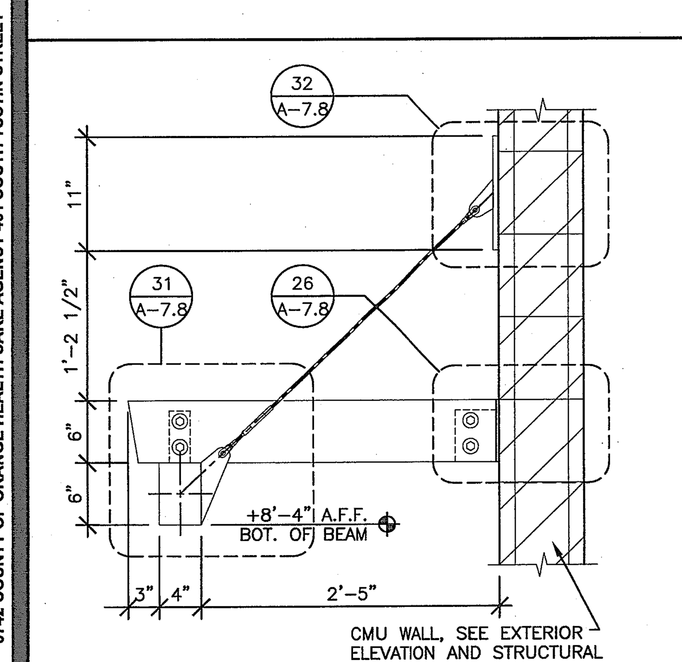

WINDOW CANOPY SCALE: 1"=1'-0" 29

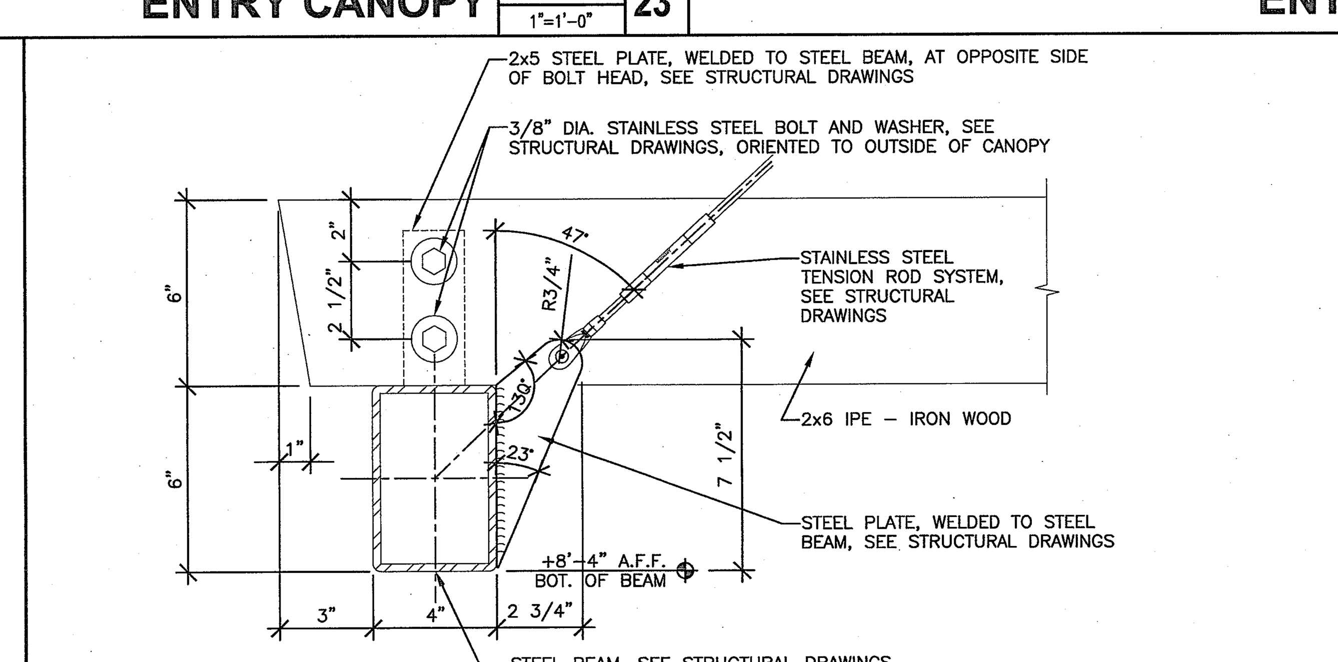

ENTRY CANOPY AT BEAM SCALE: 3"=1'-0" 31

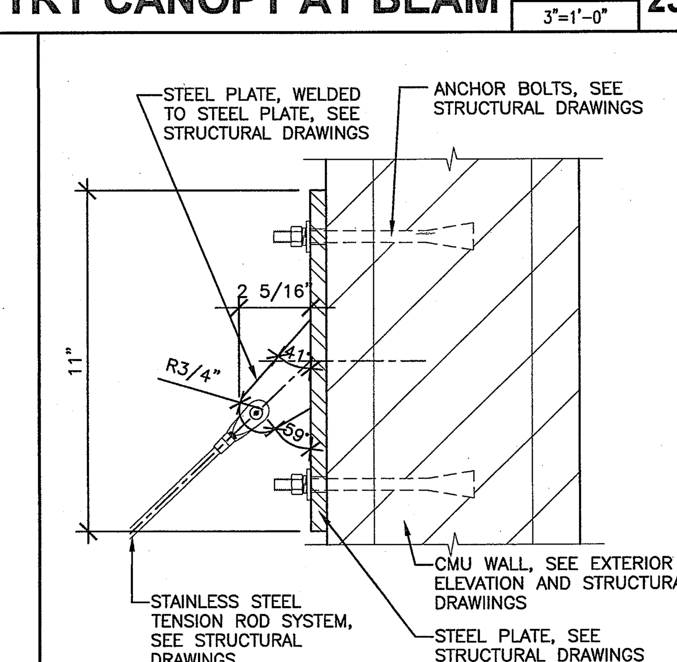

WINDOW CANOPY SCALE: 3"=1'-0" 32

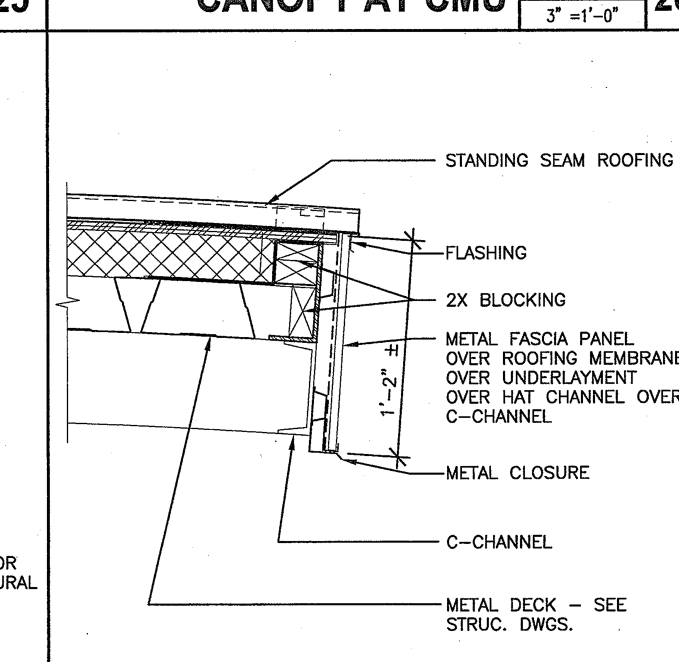

STANDINGSEAM FASCIA SCALE: 1-1/2"=1'-0" 33

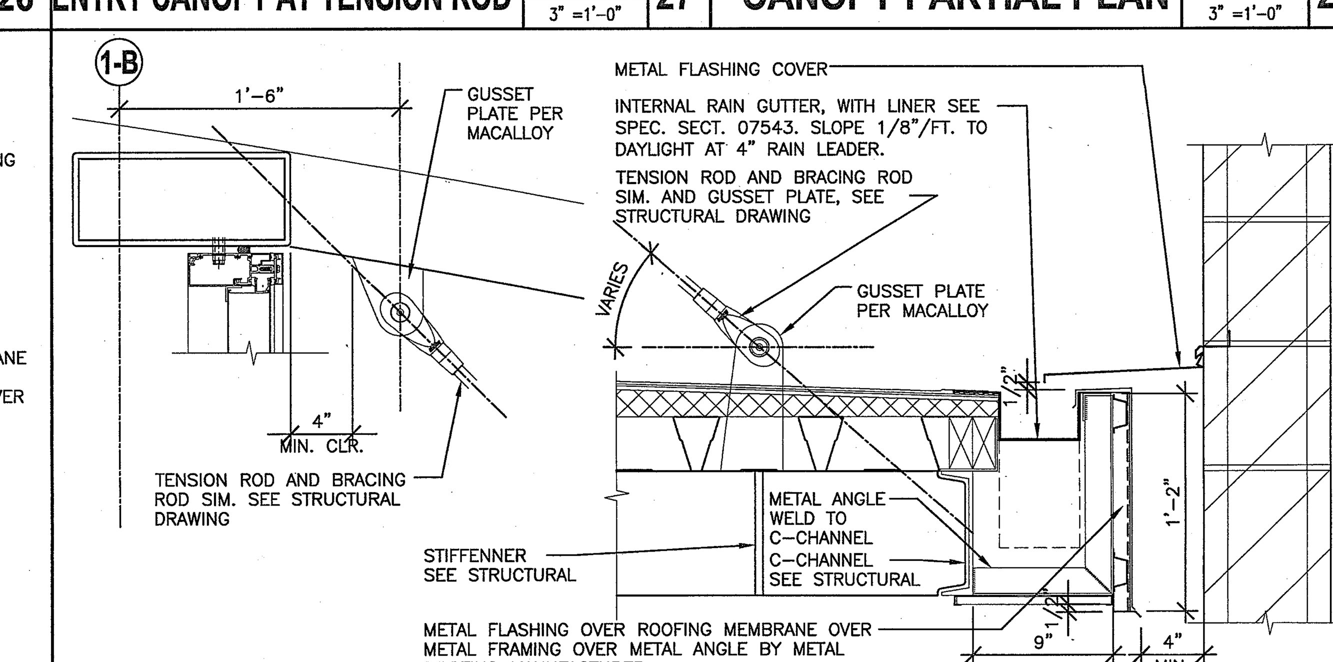

CANOPY SUPPORT SCALE: 1 1/2"=1'-0" 35

0742 COUNTY OF ORANGE HEALTH CARE AGENCY 401 SOUTH TUSTIN STREET

County of Orange
OC PUBLIC WORKS
Architecture & Engineering

Revisions

0742

Sym.	Descrip.	Date	By

Consultants

Drawn____ Chkd.____ Date____

A-E Seal

LICENSED ARCHITECT ALLEN L. HIBBS NO. C10511 REN.7/31/2011 STATE OF CALIFORNIA

A-E ALEXANDER + HIBBS, AIA, INC.

ALEXANDER + HIBBS, AIA, INC. Architecture and Planning 1200 N. JEFFERSON ST. SUITE A ANAHEIM, CALIFORNIA 92807 (714) 630-3686

Design DA Chkd. AH Date Nov. 26, 2009

Sht Title DETAILS

Project COUNTY OF ORANGE HEALTH CARE AGENCY 401 SOUTH TUSTIN STREET

401 SOUTH TUSTIN STREET ORANGE, CA 92866

PROJ. NO. 100-042-P210-4200

Plan No. 52333-03608

Sheet A-7.8