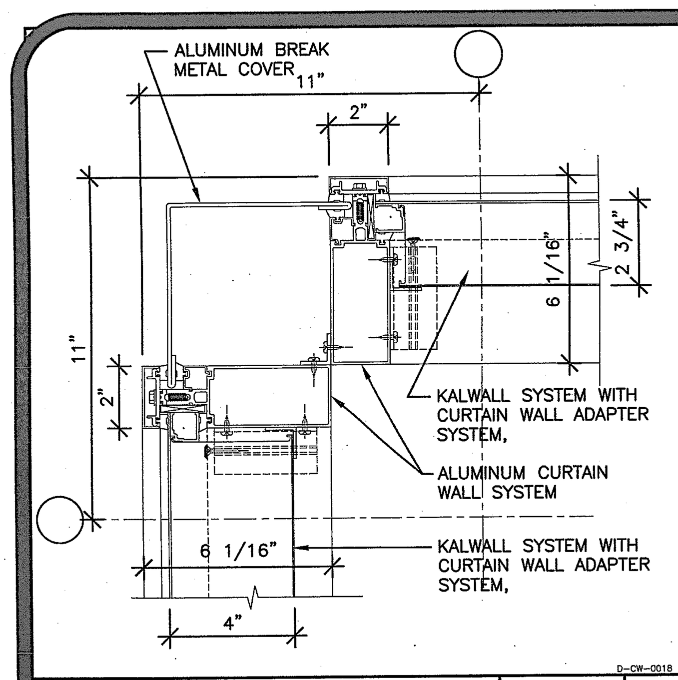

CURTAIN WALL CORNER. SCALE: 3"=1'-0" 1

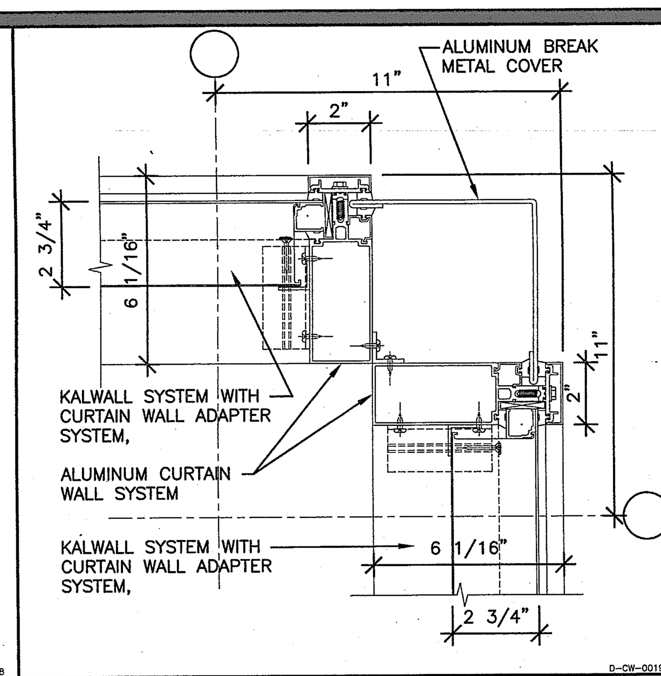

CURTAIN WALL CORNER. SCALE: 3"=1'-0" 2

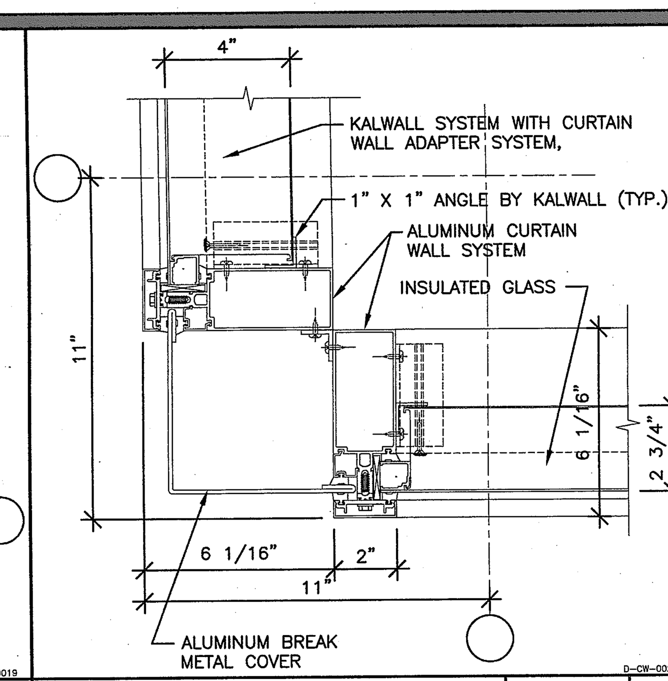

CURTAIN WALL CORNER. SCALE: 3"=1'-0" 3

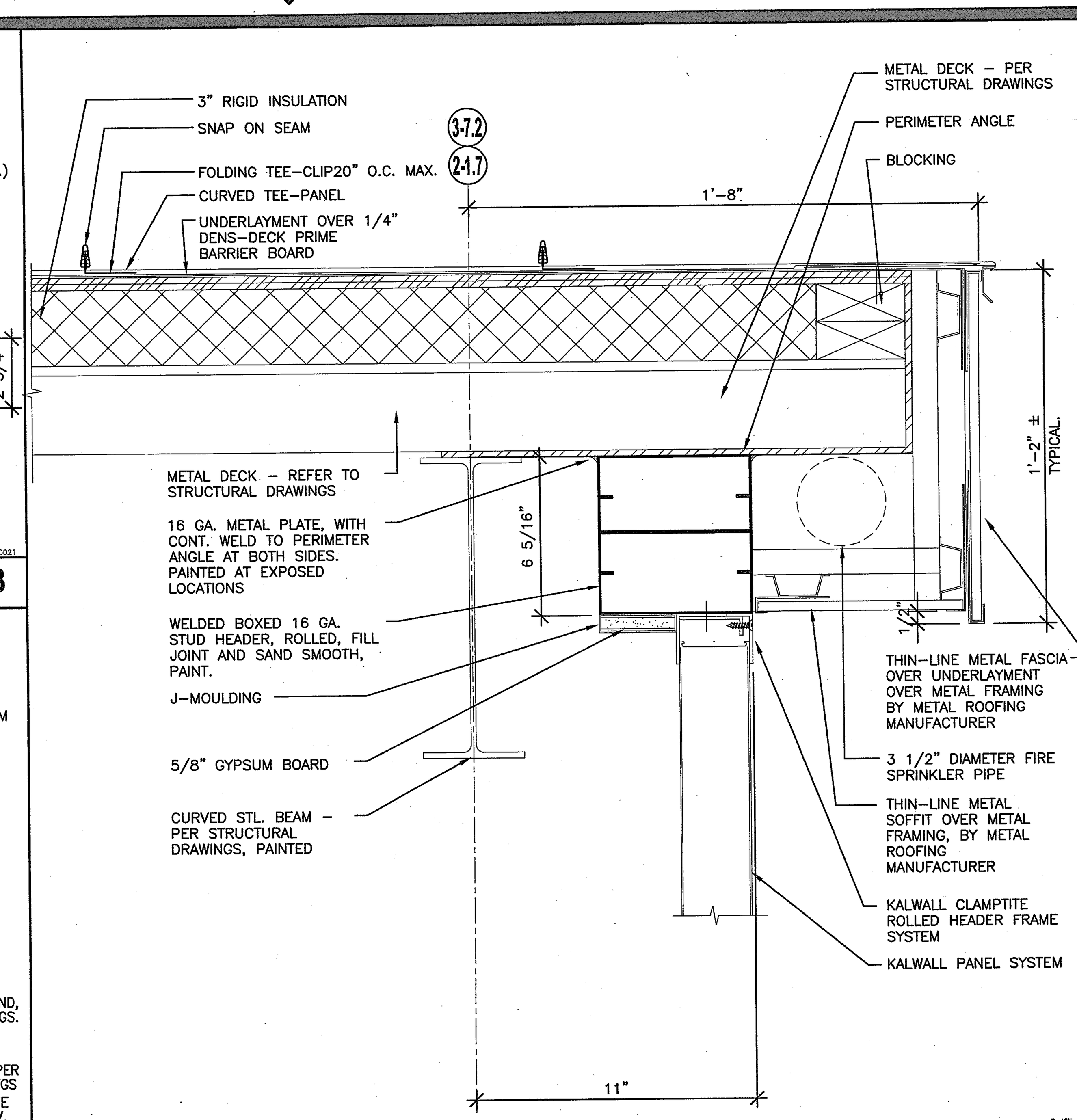

KALWALL @ TOWER SCALE: 3"=1'-0" 12

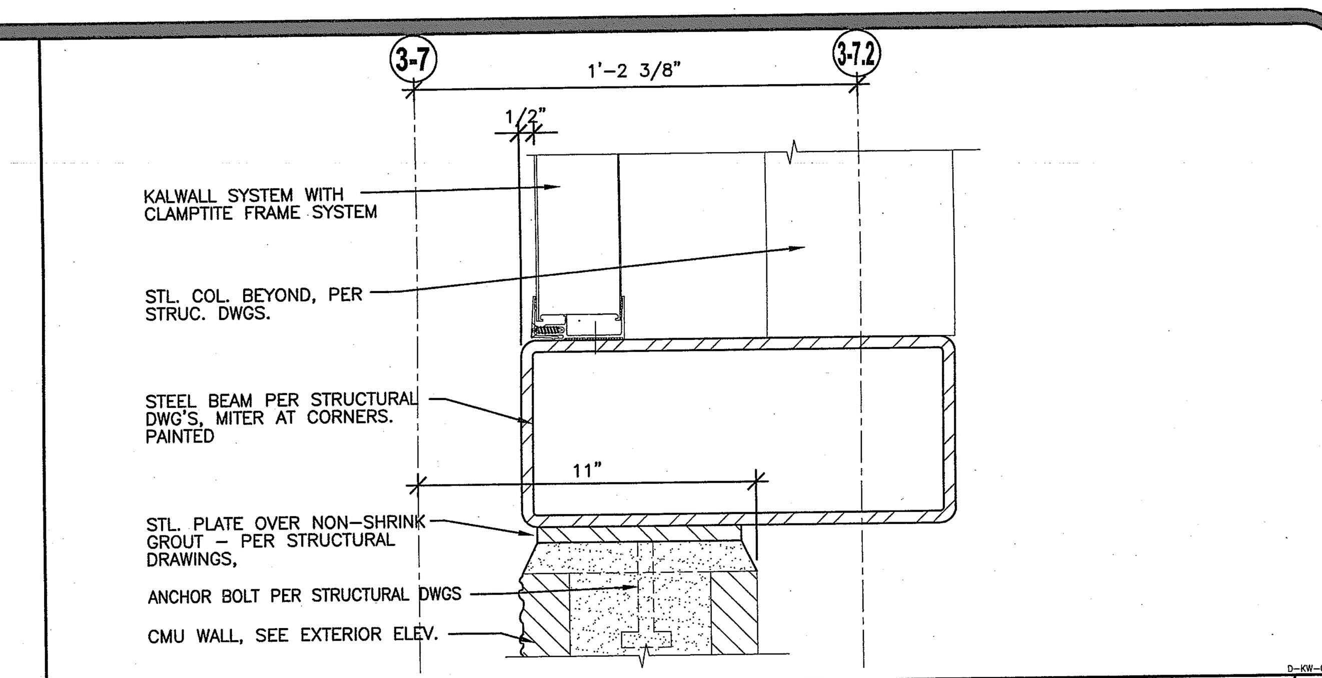

KALWALL SILL SCALE: 3"=1'-0" 7

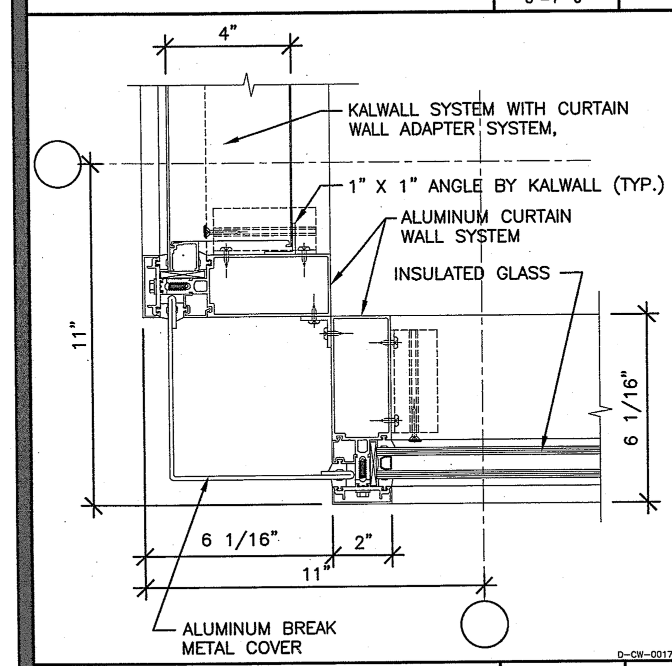

CURTAIN WALL CORNER. SCALE: 3"=1'-0" 8

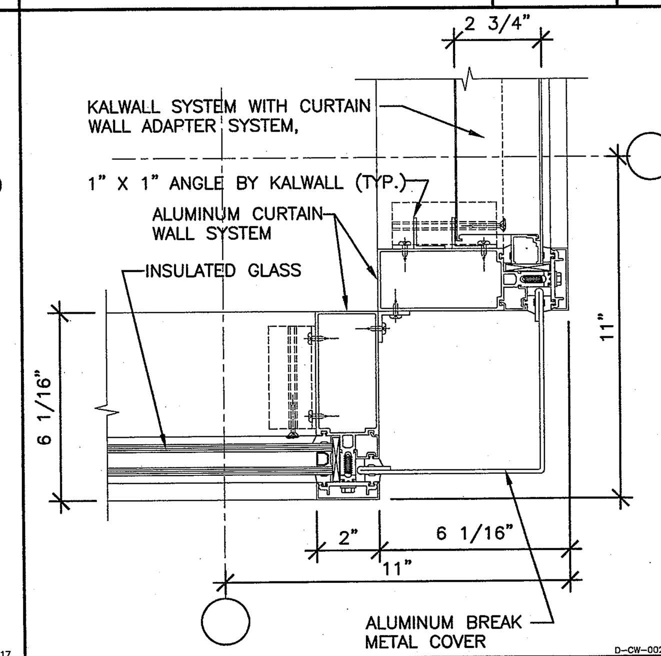

CURTAIN WALL CORNER. SCALE: 3"=1'-0" 9

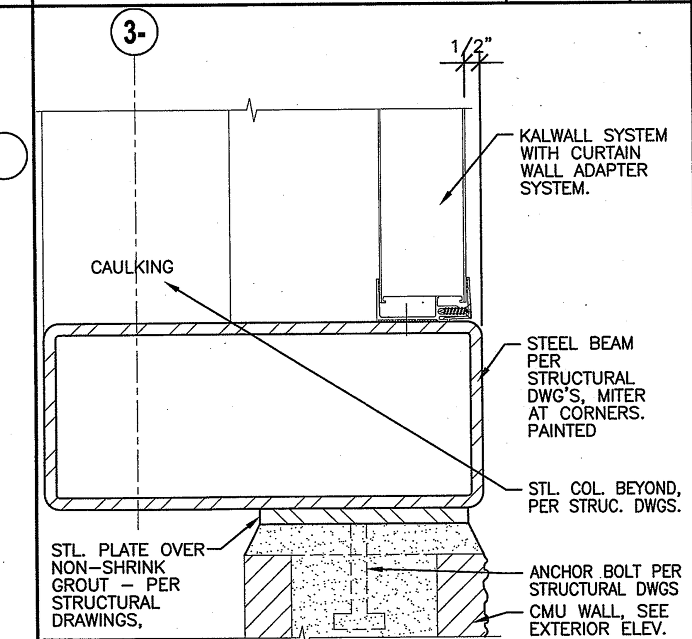

KALWALL SILL SCALE: 3"=1'-0" 10

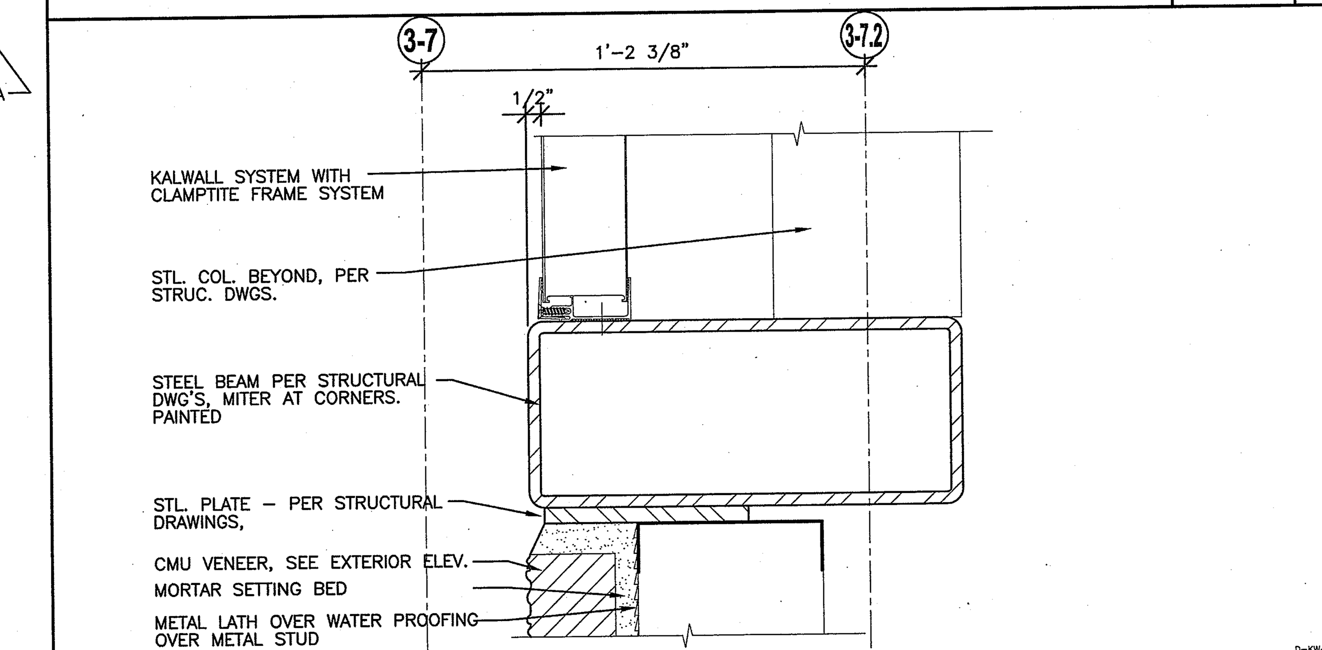

CURTAIN WALL SILL SCALE: 3"=1'-0" 14

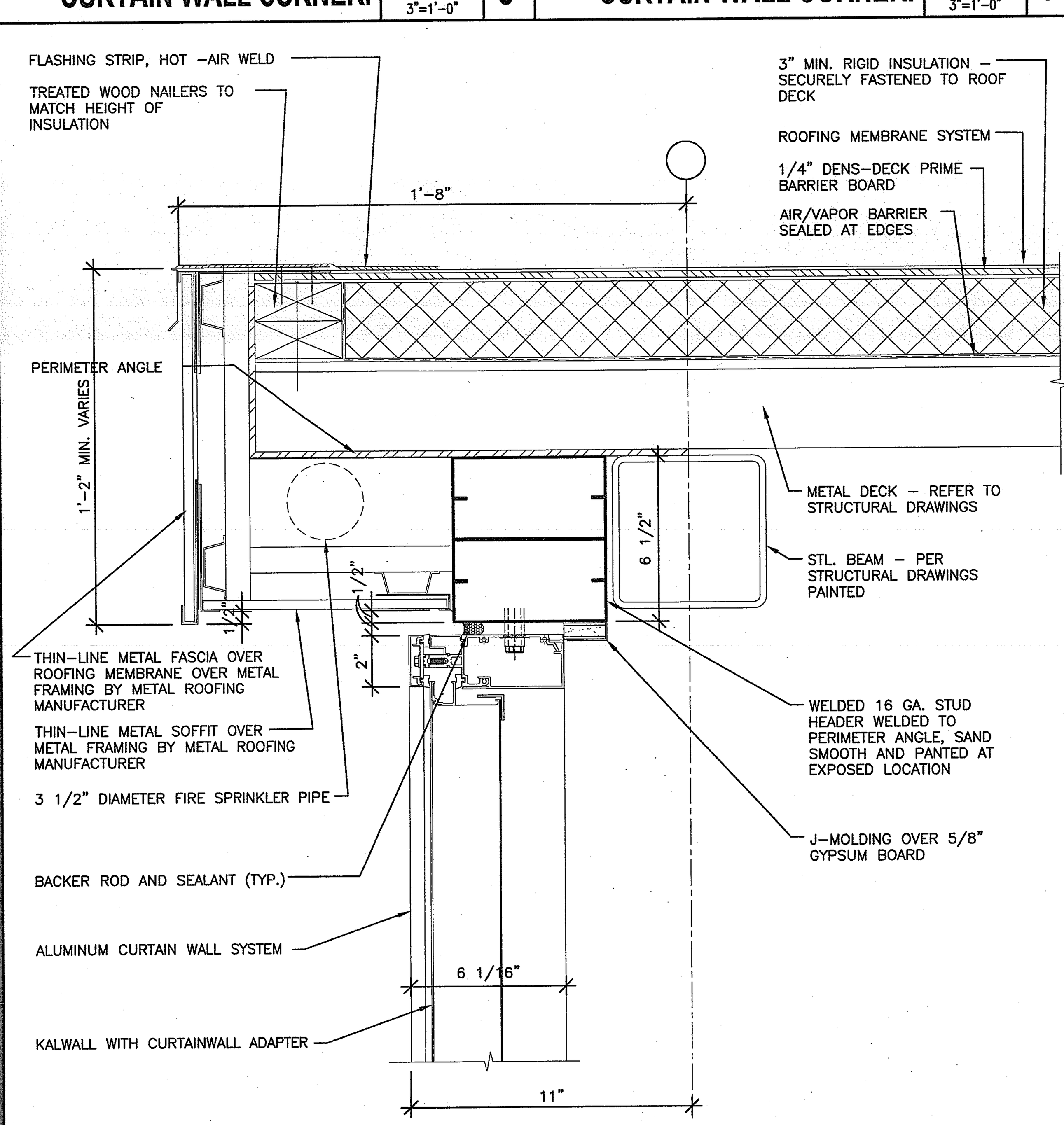

CURTAIN WALL @ CLEARSTORY SCALE: 3"=1'-0" 23

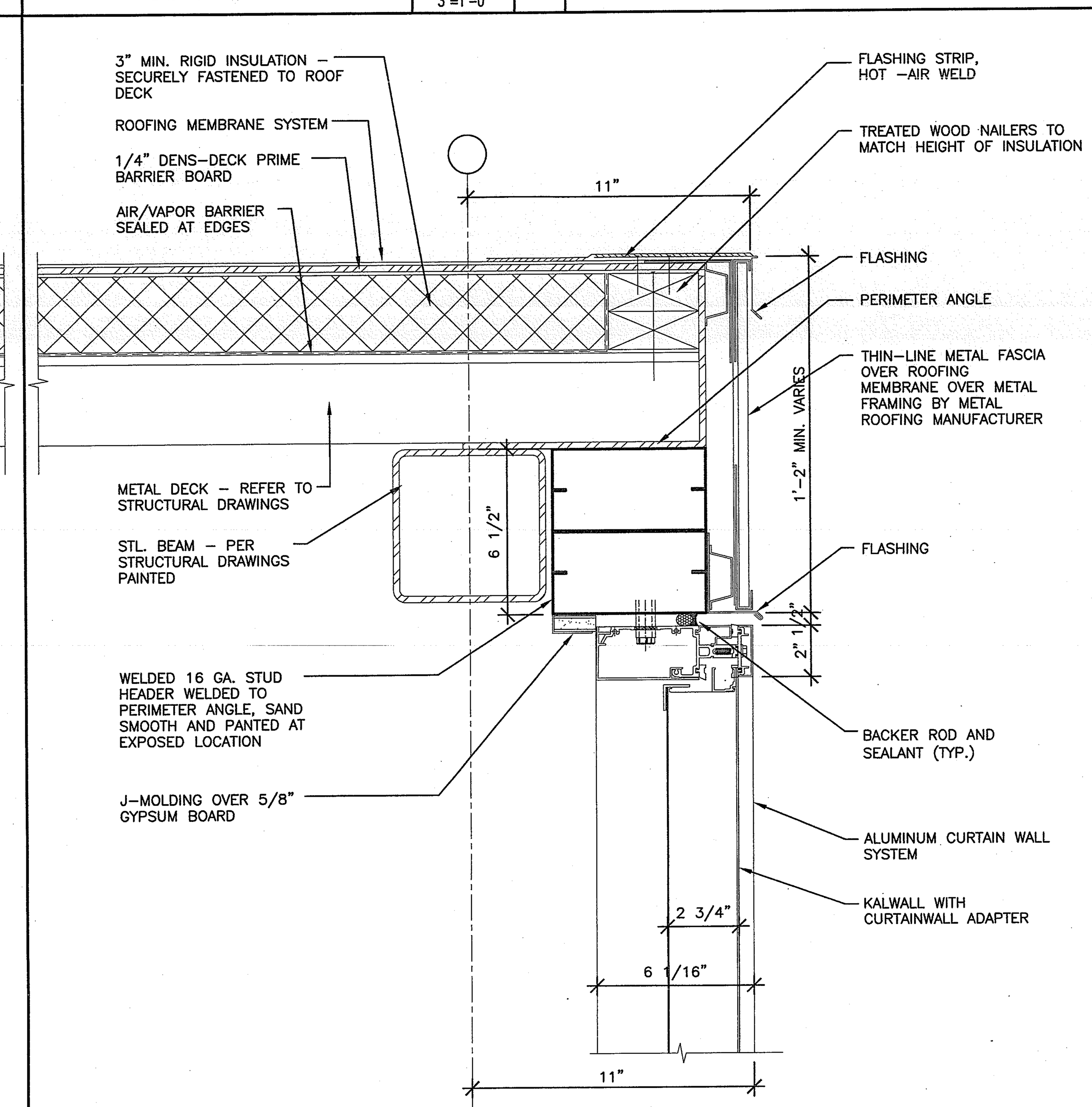

CURTAIN WALL @ CLEARSTORY SCALE: 3"=1'-0" 25

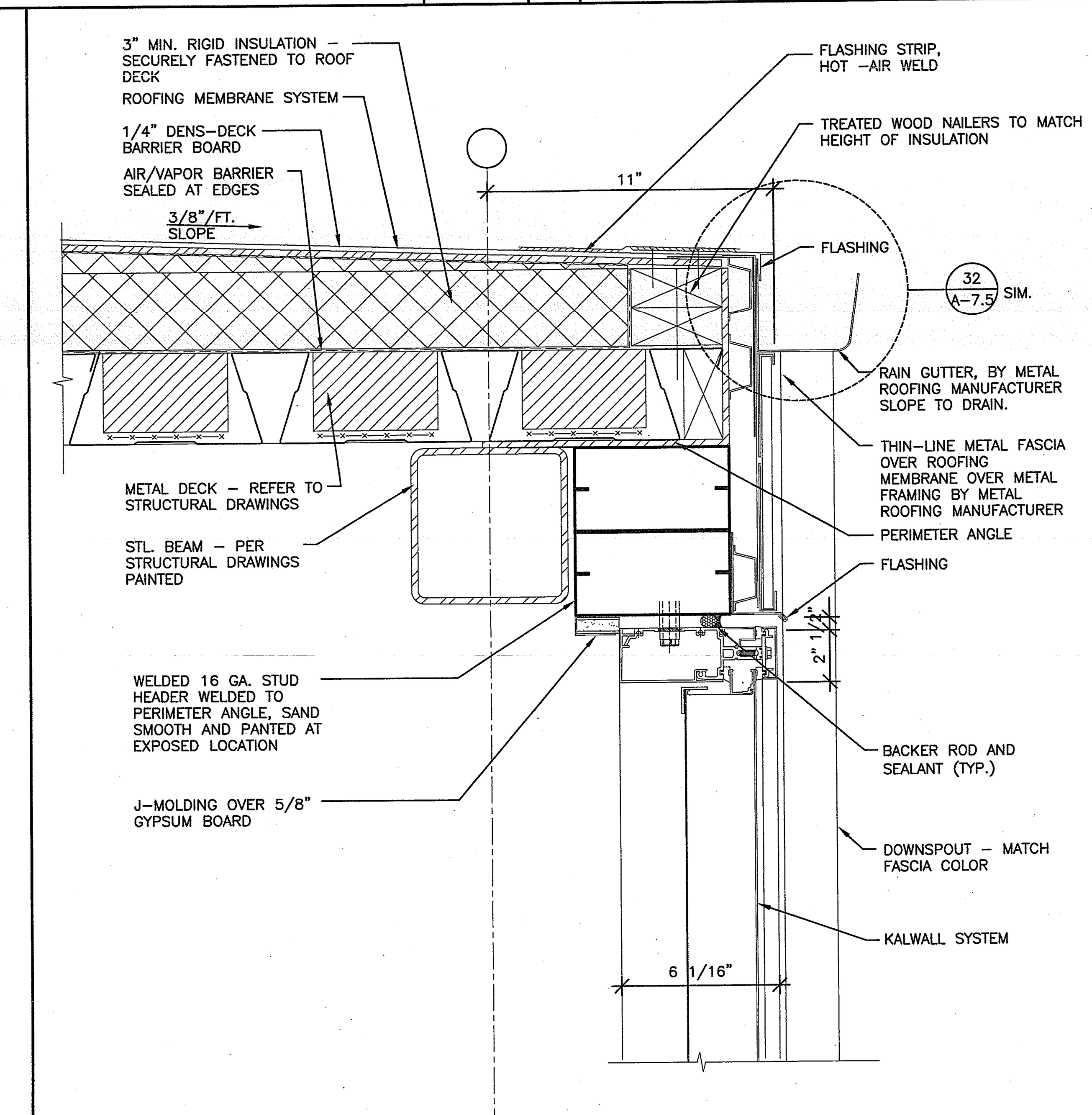

CURTAIN WALL @ CLEARSTORY SCALE: 3"=1'-0" 27

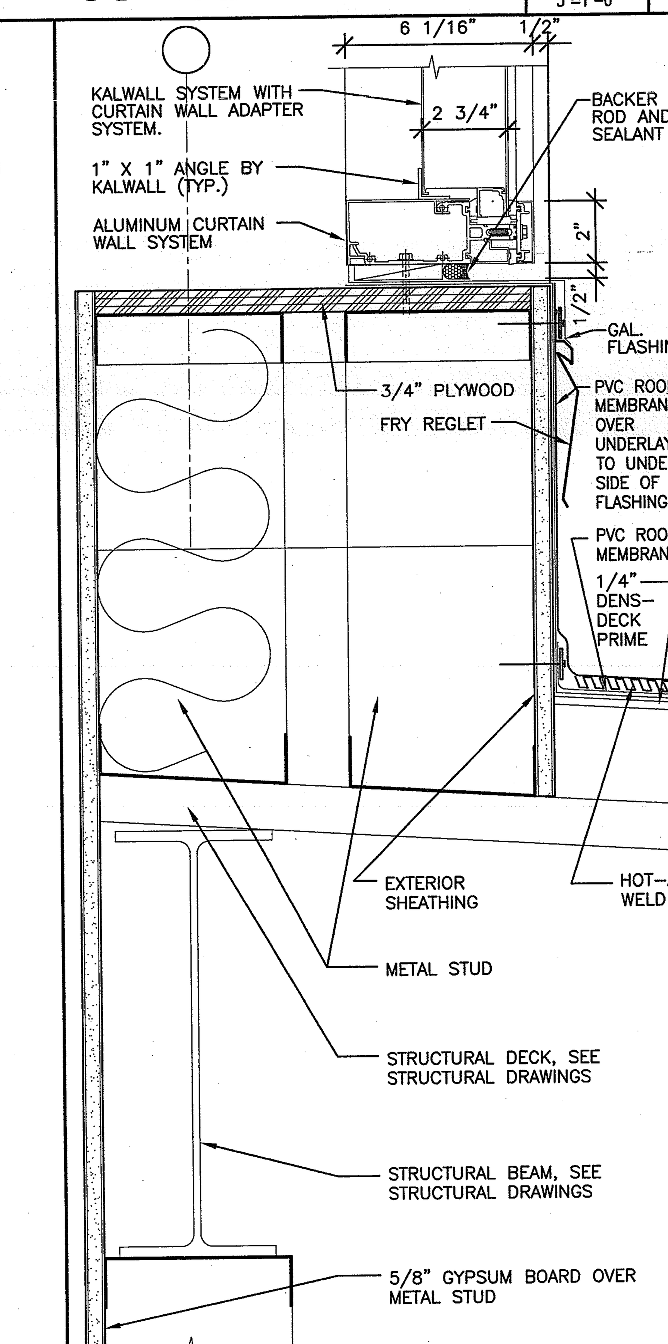

CURTAIN WALL SILL SCALE: 3"=1'-0" 28

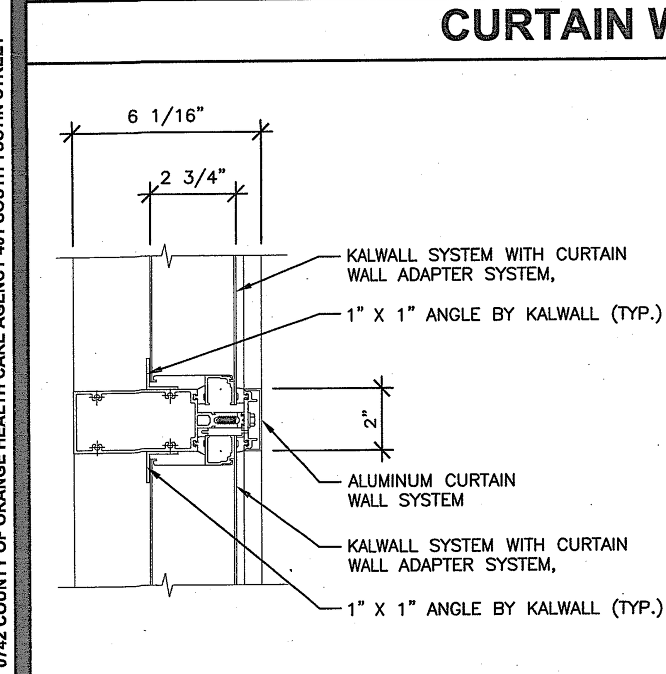

CURTAIN WALL INTER. HORIZ. SCALE: 3"=1'-0" 29

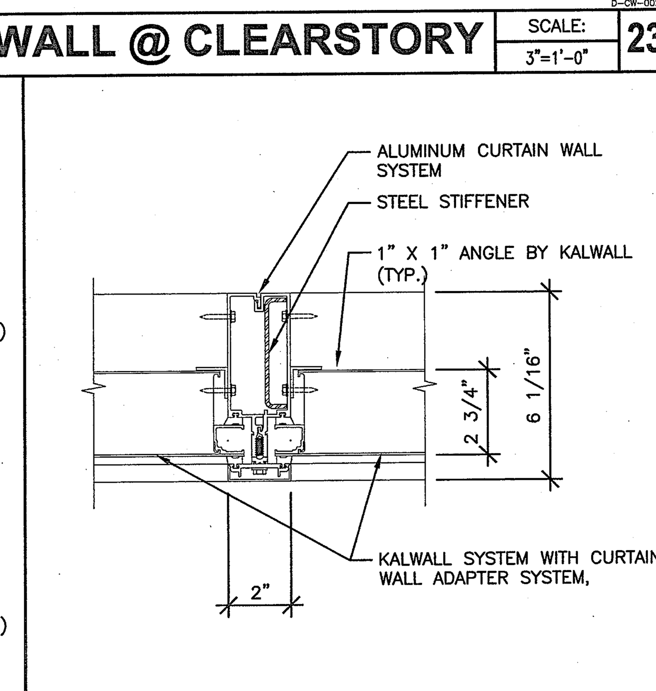

CURTAIN WALL INTER. VERT. SCALE: 3"=1'-0" 30

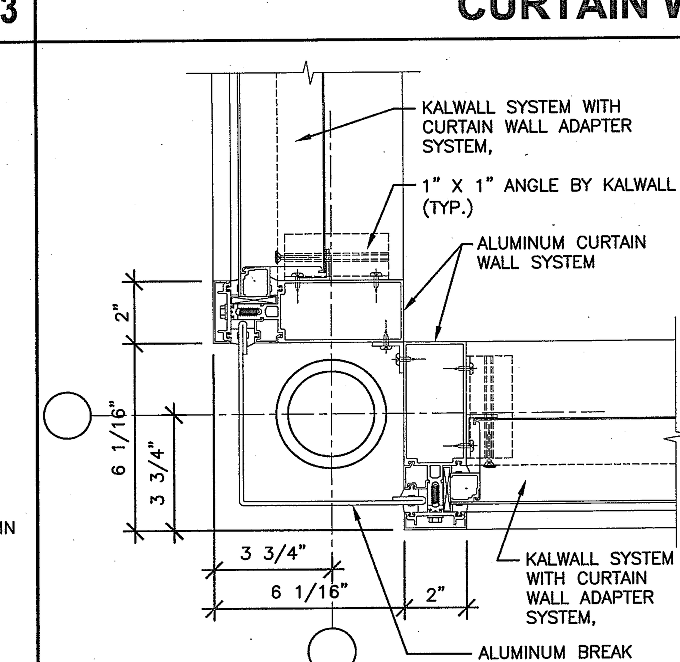

CURTAIN WALL CORNER. SCALE: 3"=1'-0" 31

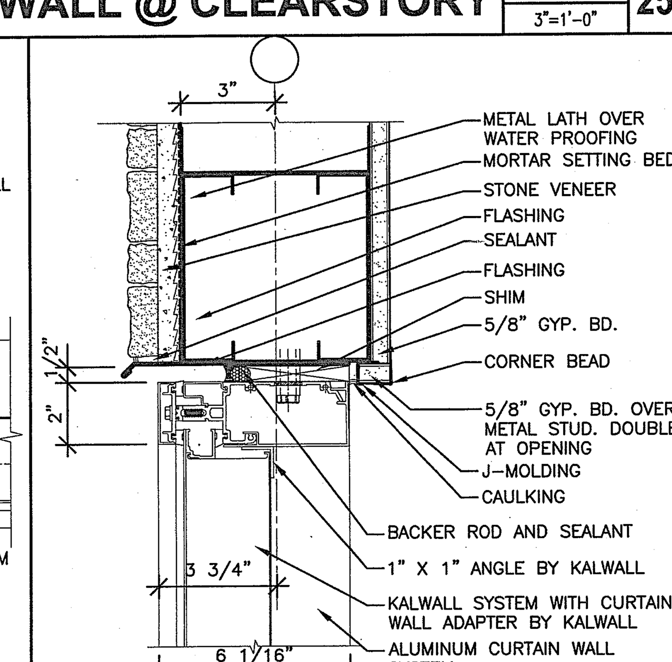

CURTAIN WALL HEAD @ CMU WALL SCALE: 3"=1'-0" 32

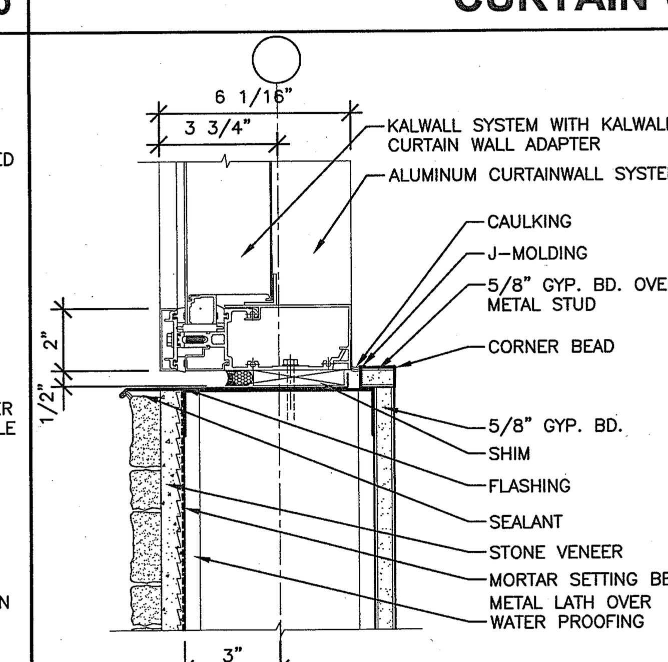

CURTAIN WALL SILL @ STONE VENEER SCALE: 3"=1'-0" 33

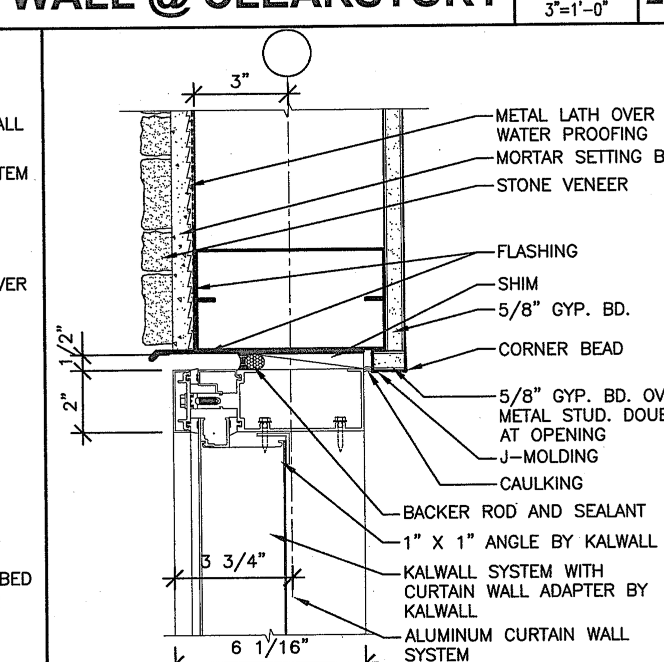

CURTAIN WALL JAMB @ STONE VENEER SCALE: 3"=1'-0" 34

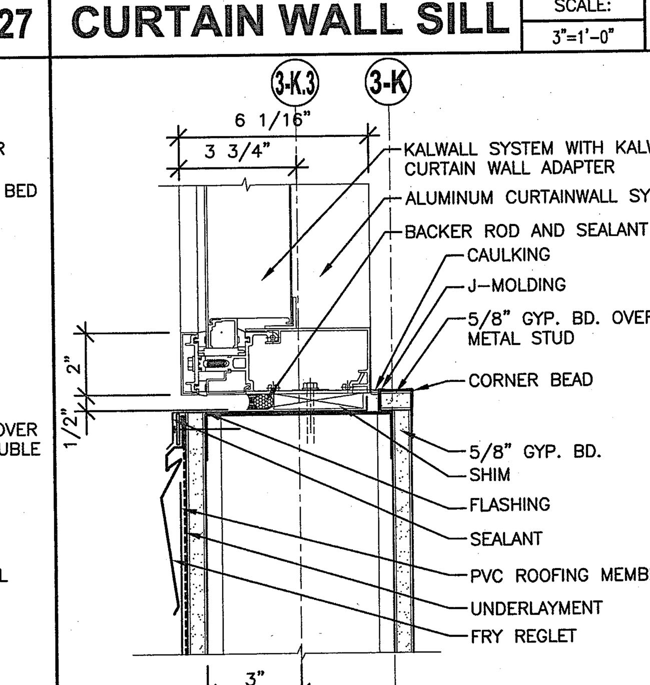

CURTAIN WALL SILL @ ROOFING SCALE: 3"=1'-0" 35

0742 COUNTY OF ORANGE HEALTH CARE AGENCY 401 SOUTH TUSTIN STREET

County of Orange
OC PUBLIC WORKS
Architecture & Engineering

Revisions

Sym.	Descrip.	Date	By
0742 △			

Consultants

Drawn ___ Chkd. ___ Date ___

A-E Seal

LICENSED ARCHITECT ALLEN L. HIBBS NO. C10511 REN.7/31/2011 STATE OF CALIFORNIA

A-E ALEXANDER + HIBBS, AIA, INC.

inc. ALEXANDER + HIBBS, AIA, INC. Architecture and Planning 1200 N. JEFFERSON ST. SUITE A ANAHEIM, CALIFORNIA 92807 (714) 630-3688

Design DF, MS Chkd. AH Date Nov. 26, 2009

Sht Title DETAILS

Project COUNTY OF ORANGE HEALTH CARE AGENCY 401 SOUTH TUSTIN STREET

401 SOUTH TUSTIN STREET ORANGE, CA 92866

PROJ. NO. 100-042-P210-4200

Plan No. 52333-03608

Sheet A-7.7