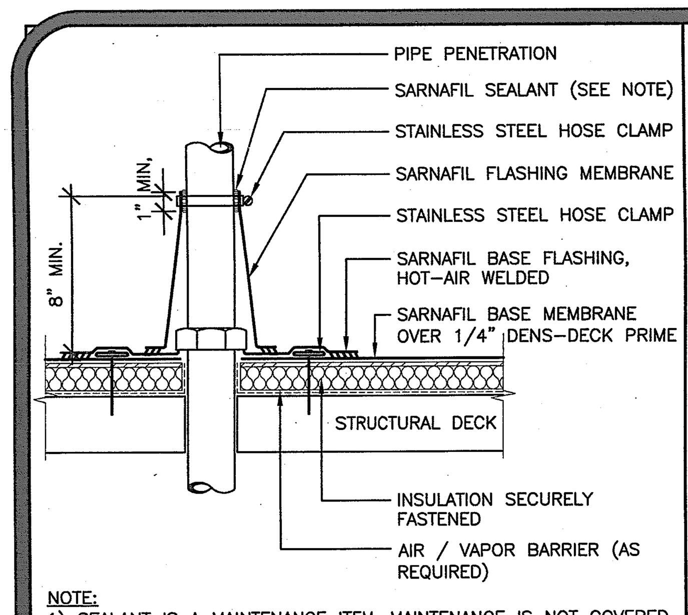

NOTE:
1) SEALANT IS A MAINTENANCE ITEM. MAINTENANCE IS NOT COVERED UNDER SARNAFIL WARRANTY.
2) VAPOR BARRIER SHALL BE SEALED AT EDGES.

D-RF-0016

CONE FLASHING @ PENETRATION SCALE: N.T.S. **1**

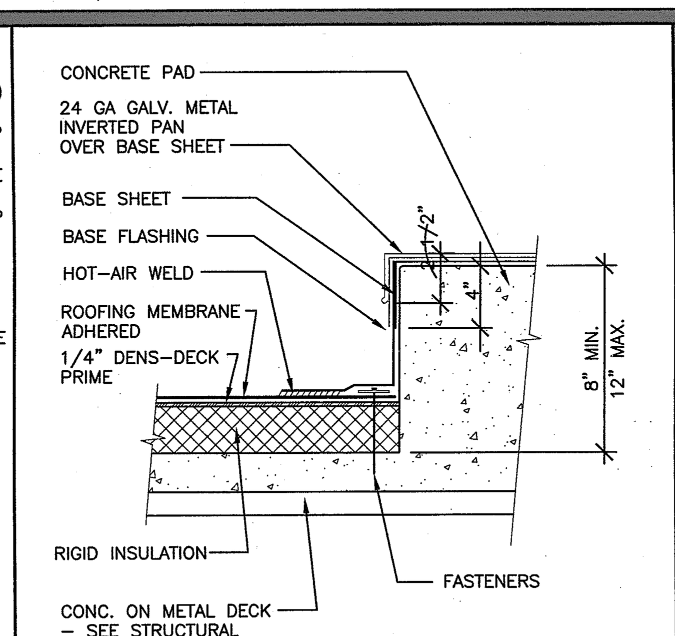

D-RF-0004

EQUIPMENT PAD SCALE: 1-1/2"=1'-0" **2**

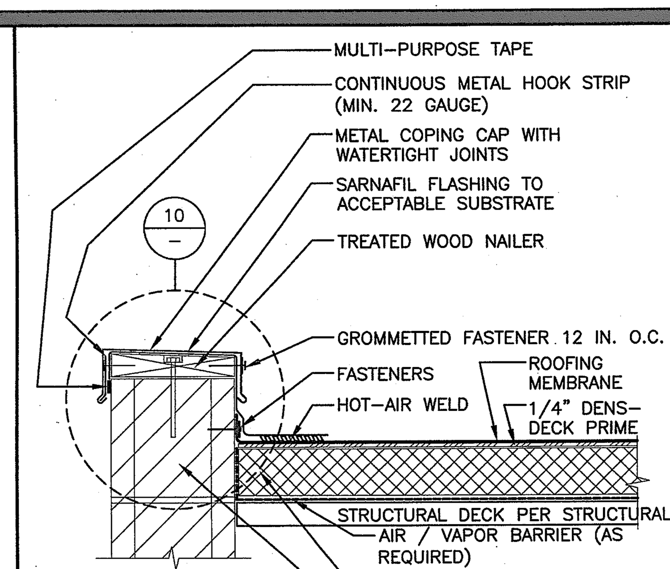

NOTES:
1) NAILERS SHALL BE SECURELY ANCHORED TO THE DECK TO RESIST A MINIMUM FORCE OF 300 POUNDS PER LINEAR FOOT. REFER TO FACTORY MUTUAL DATA SHEET 1-49.

D-RF-0002

COPING CAP @ PARAPET WALL SCALE: 1 1/2"=1'-0" **3**

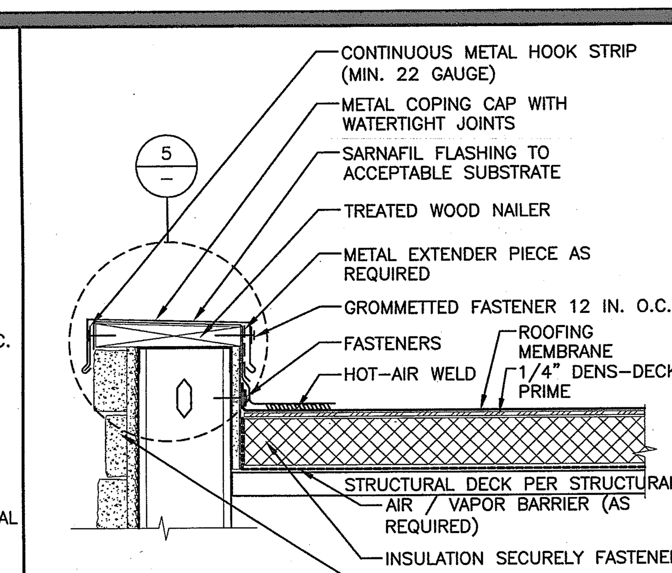

NOTES:
1) NAILERS SHALL BE SECURELY ANCHORED TO THE DECK TO RESIST A MINIMUM FORCE OF 300 POUNDS PER LINEAR FOOT. REFER TO FACTORY MUTUAL DATA SHEET 1-49.

D-RF-0003

COPING CAP @ PARAPET WALL SCALE: 1 1/2"=1'-0" **4**

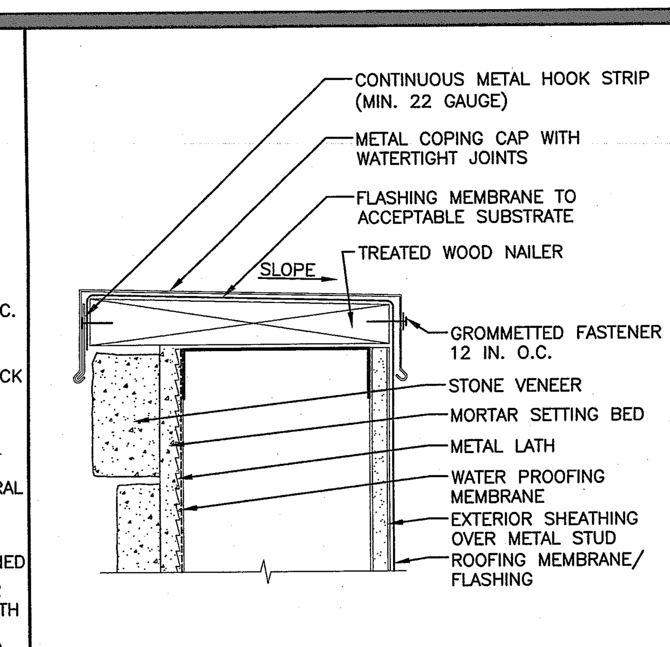

D-WC-0003

COPING CAP @ PARAPET WALL SCALE: 3"=1'-0" **5**

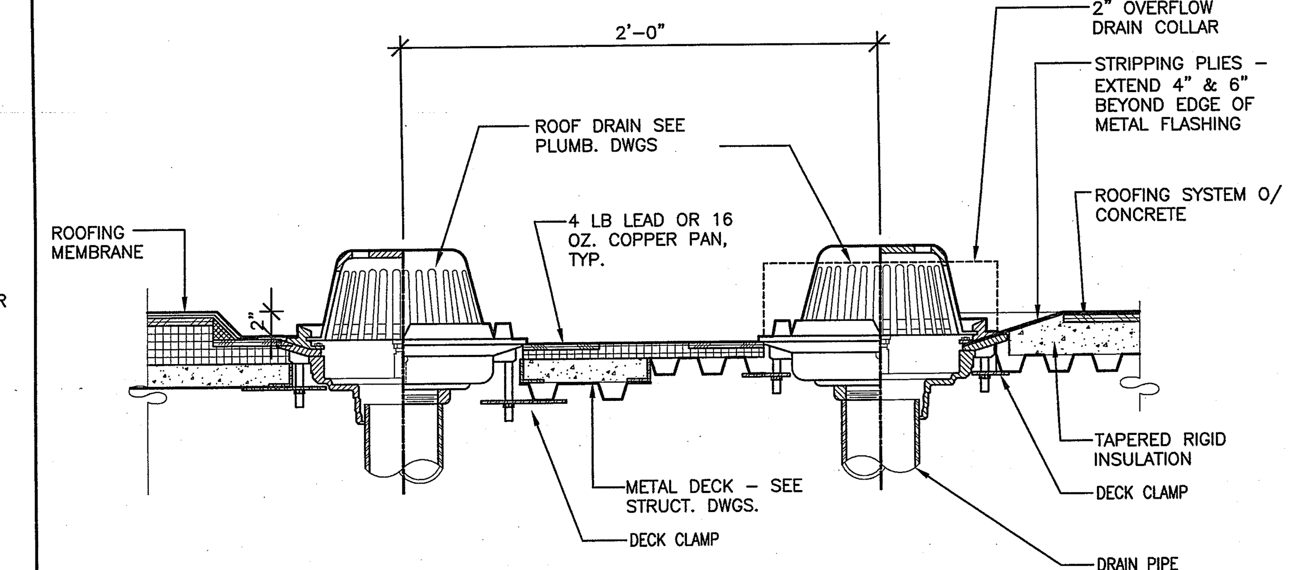

NOTE: 1. SEE ROOF PLANS FOR ORIENTATION TO ADJACENT WALLS
2. ROOFING MEMBRANE PLIES, METAL FLASHING & STRIPPING PLIES SHALL ALL EXTEND UNDER CLAMPING RING

D003

ROOF DRAIN SCALE: 1-1/2"=1'-0" **7**

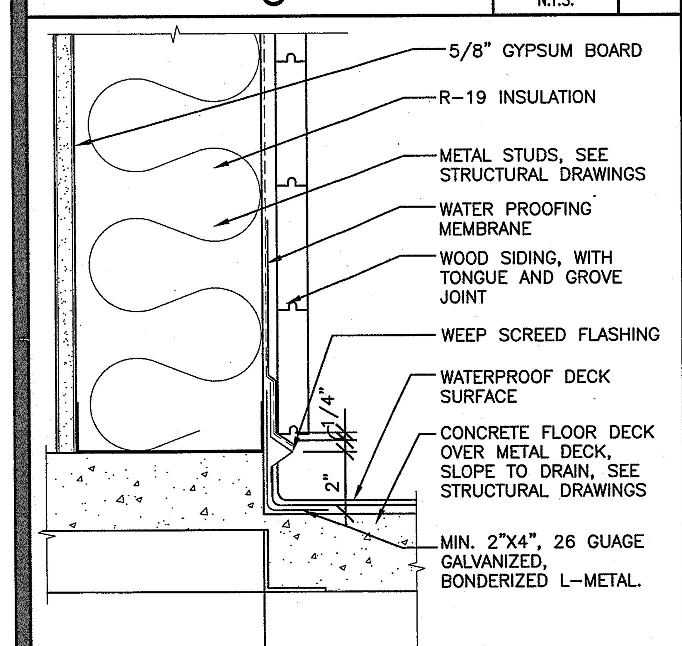

D-WS-0002

DECK AT WALL SIDING SCALE: 3"=1'-0" **8**

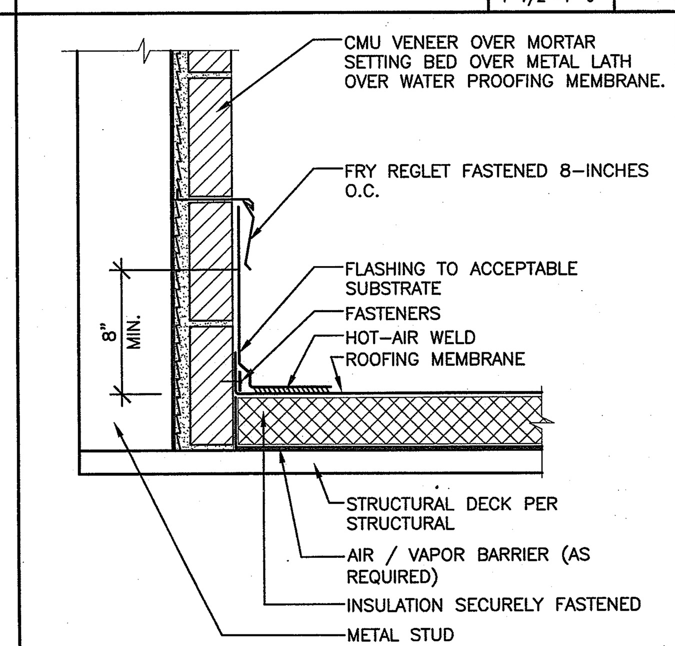

D-RF-0001

FLASHING @ CMU VENEER SCALE: 1 1/2"=1'-0" **9**

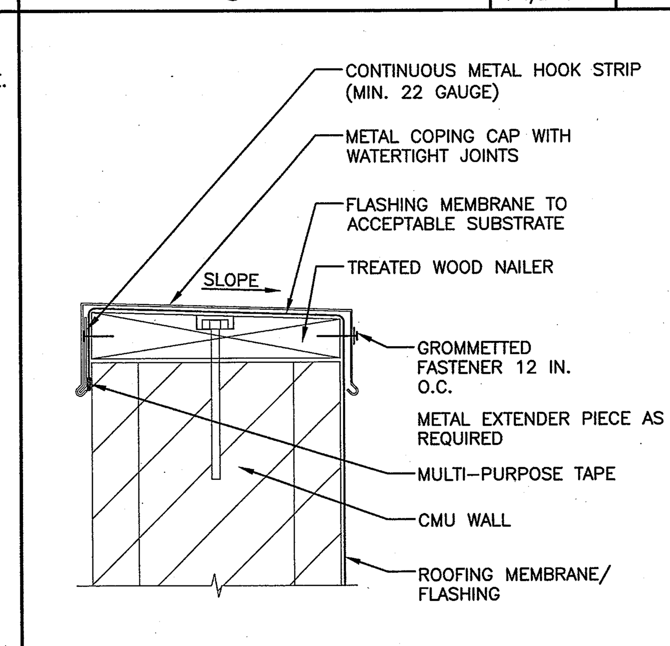

D-WC-0001

COPING CAP @ PARAPET WALL SCALE: 3"=1'-0" **10**

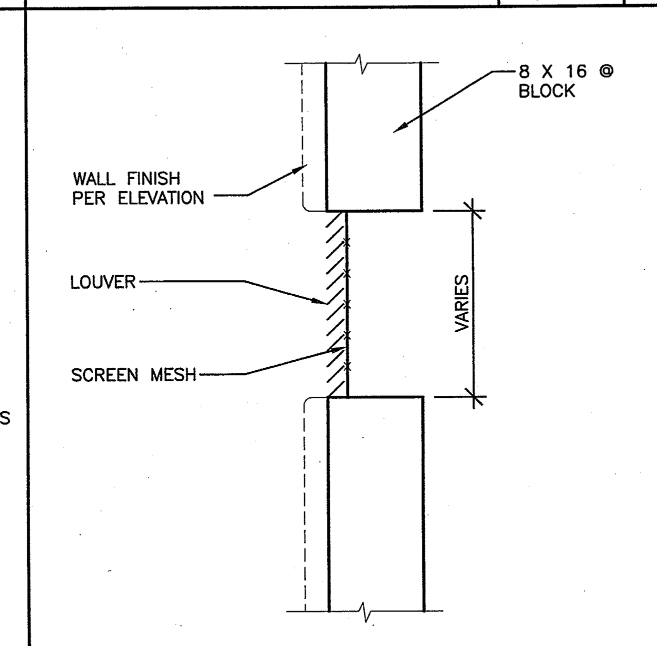

D284

LOUVER VENT SCALE: 1-1/2"=1'-0" **11**

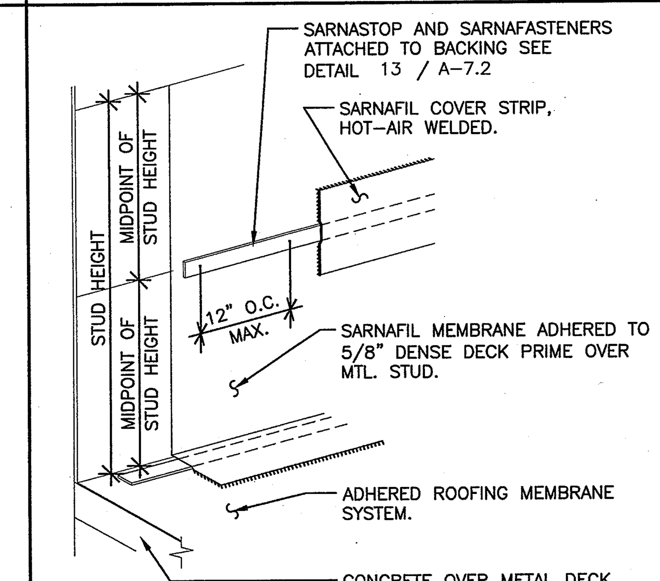

NOTE:
CONSULT SARNAFIL TECHNICAL DEPT. FOR ACCEPTABLE DETAIL WHEN FLASHING HEIGHT EXCEEDS 5'-0"

D-RF-0014

ROOFING DETAIL SCALE: 3/4"=1'-0" **12**

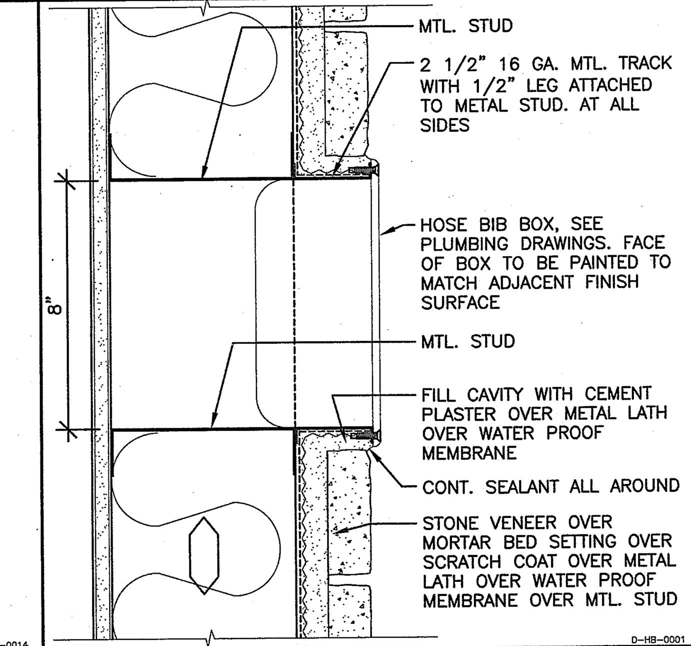

D-HB-0001

HOSE BIB BOX SCALE: 3"=1'-0" **13**

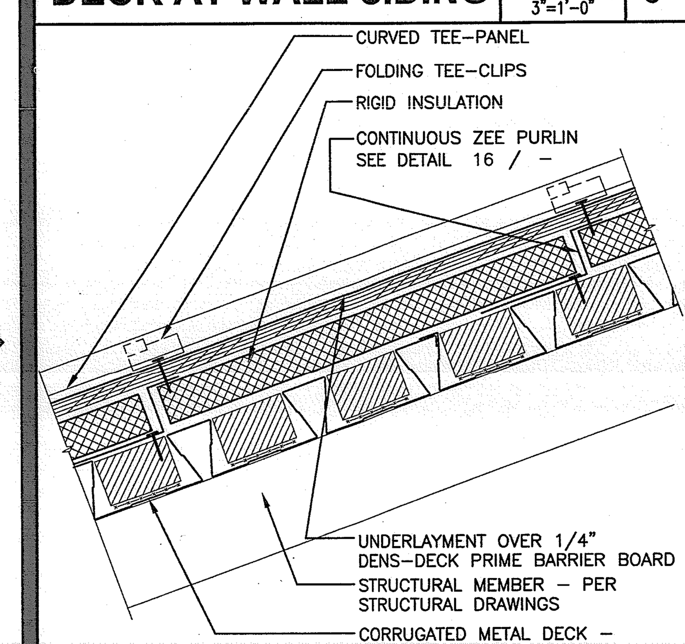

D-SSR-0001

STANDING SEAM DETAIL SCALE: 1 1/2"=1'-0" **15**

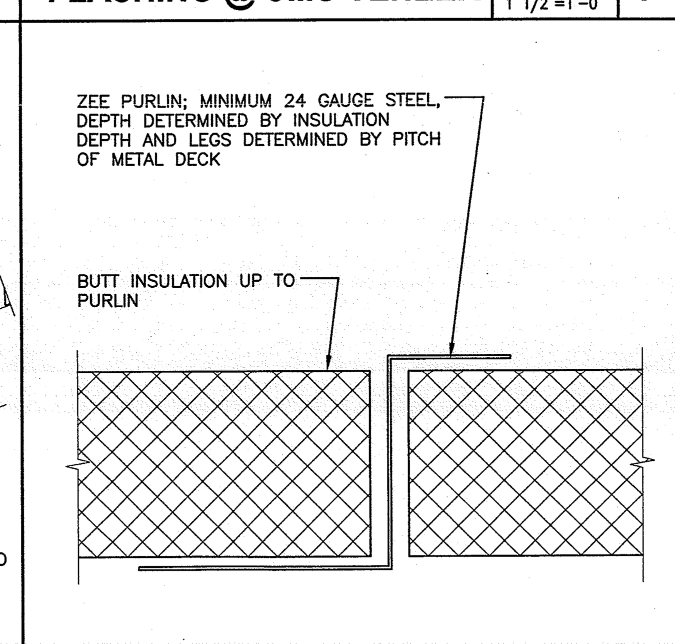

D-SSR-0002

ZEE PURLIN DETAIL SCALE: N.T.S. **16**

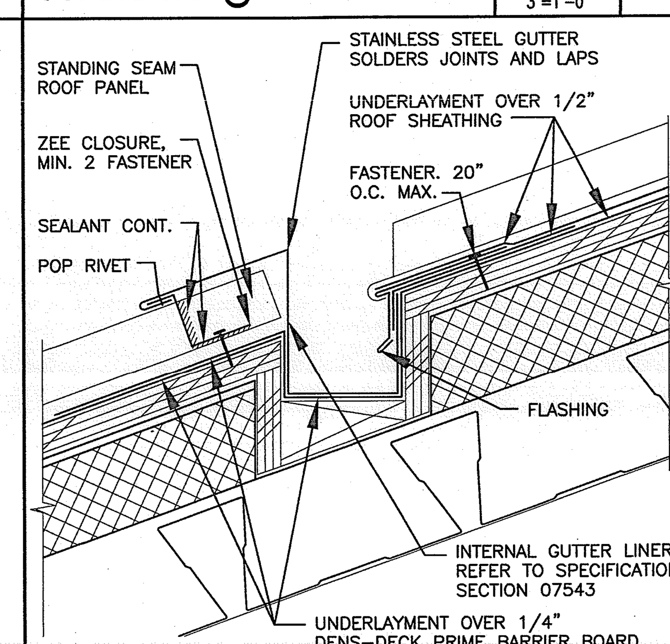

D-SSR-0003

RAIN GUTTER SCALE: 3"=1'-0" **17**

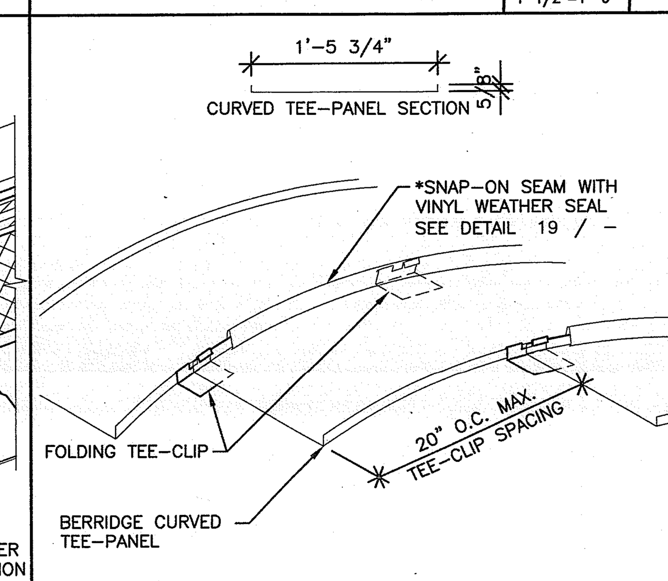

*SNAP-ON SEAM IS COVERED UNDER US PATENT NO. 4,641,475.

D-SSR-0004

CURVE TEE PANELS SCALE: 1"=1'-0" **18**

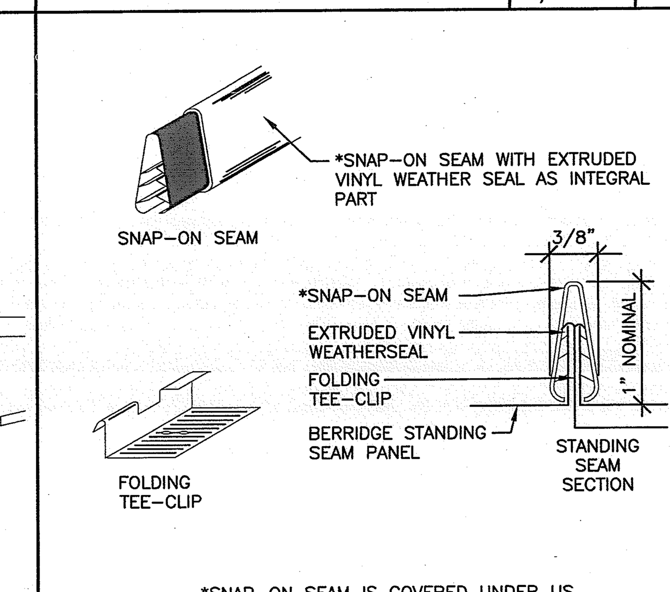

*SNAP-ON SEAM IS COVERED UNDER US PATENT NO. 4,641,475.

D-SSR-0005

STANDING SEAM SCALE: FULL **19**

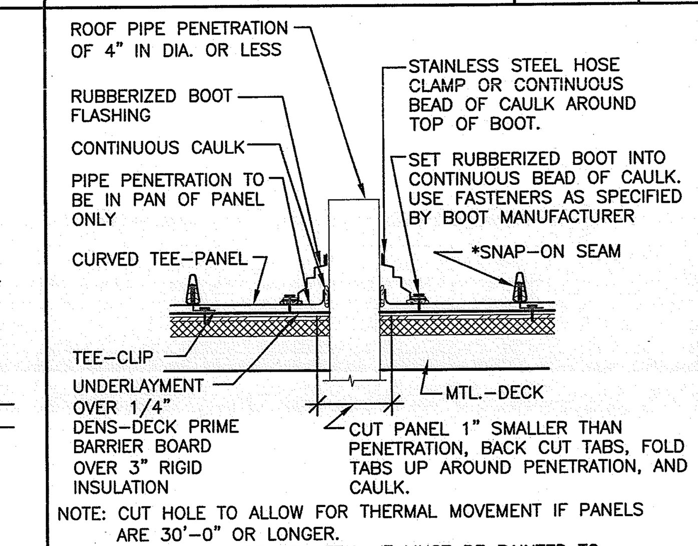

NOTE: CUT HOLE TO ALLOW FOR THERMAL MOVEMENT IF PANELS ARE 30'-0" OR LONGER.
NOTE: IF PIPE IS MADE OF METAL, IT MUST BE PAINTED TO PREVENT RUST RUN-OFF FROM STAINING PANELS.
NOTE: POSITION SQUARE BASED BOOT IN A DIAMOND ORIENTATION WHERE POSSIBLE TO AID IN DIVERTING WATER.

*SNAP-ON SEAM IS COVERED UNDER US PATENT NO. 4,641,475

D-SSR-0006

VENT THROUGH ROOF SCALE: 1 1/2"=1'-0" **20**

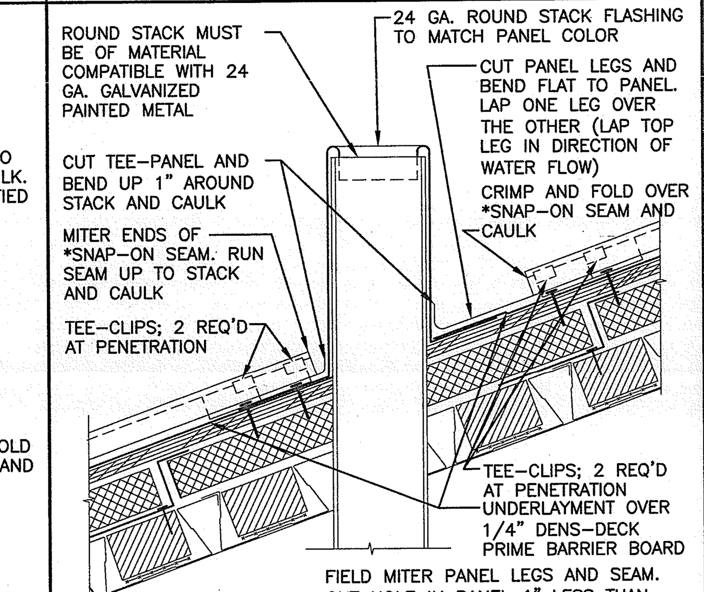

USE THIS DETAIL WHEN STACK IS OFF CENTER OF *SNAP-ON SEAM
*SNAP-ON SEAM IS COVERED UNDER US PATENT NO. 4,641,475

D-SSR-0010

VENT THROUGH ROOF SCALE: 1 1/2"=1'-0" **21**

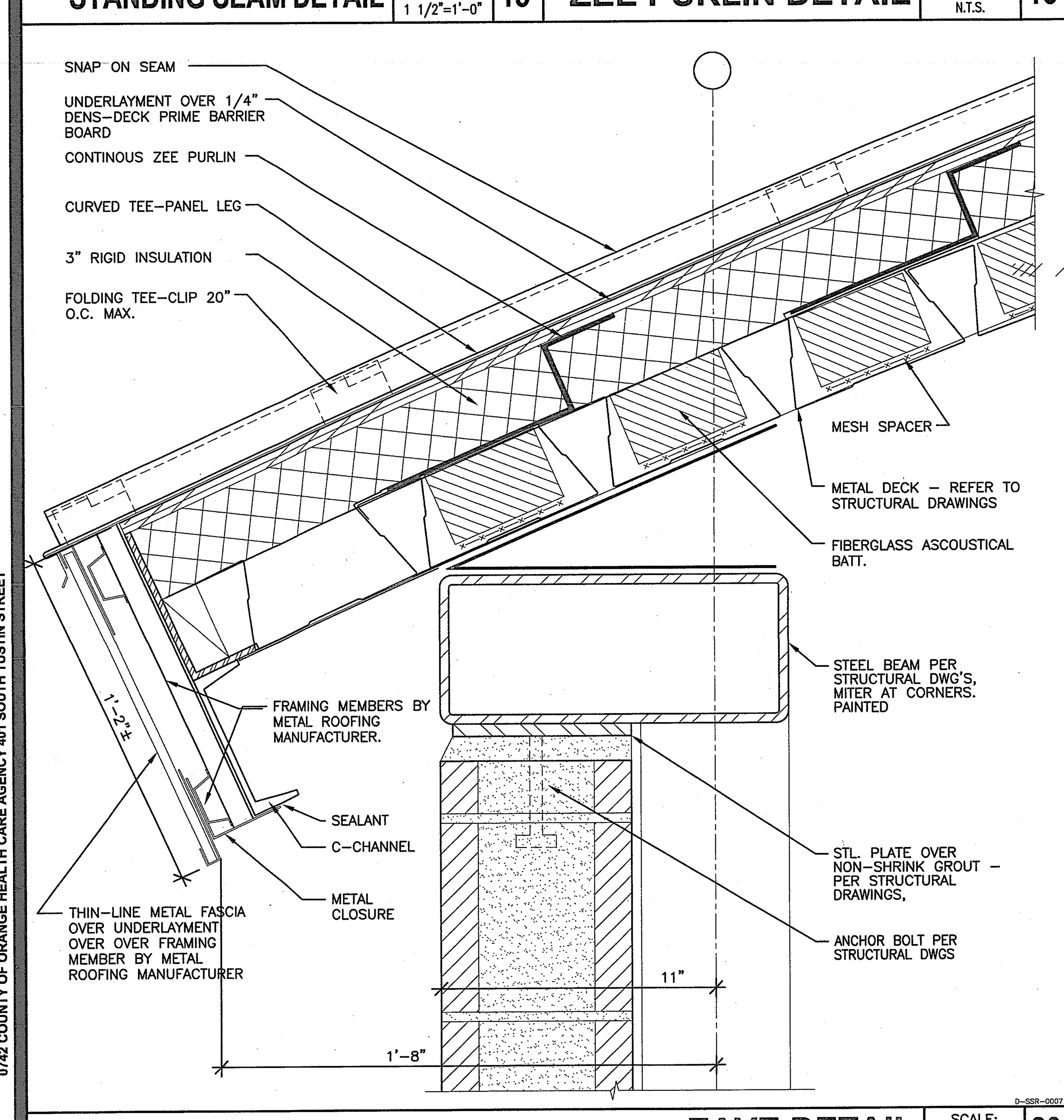

D-SSR-0007

EAVE DETAIL SCALE: 3"=1'-0" **30**

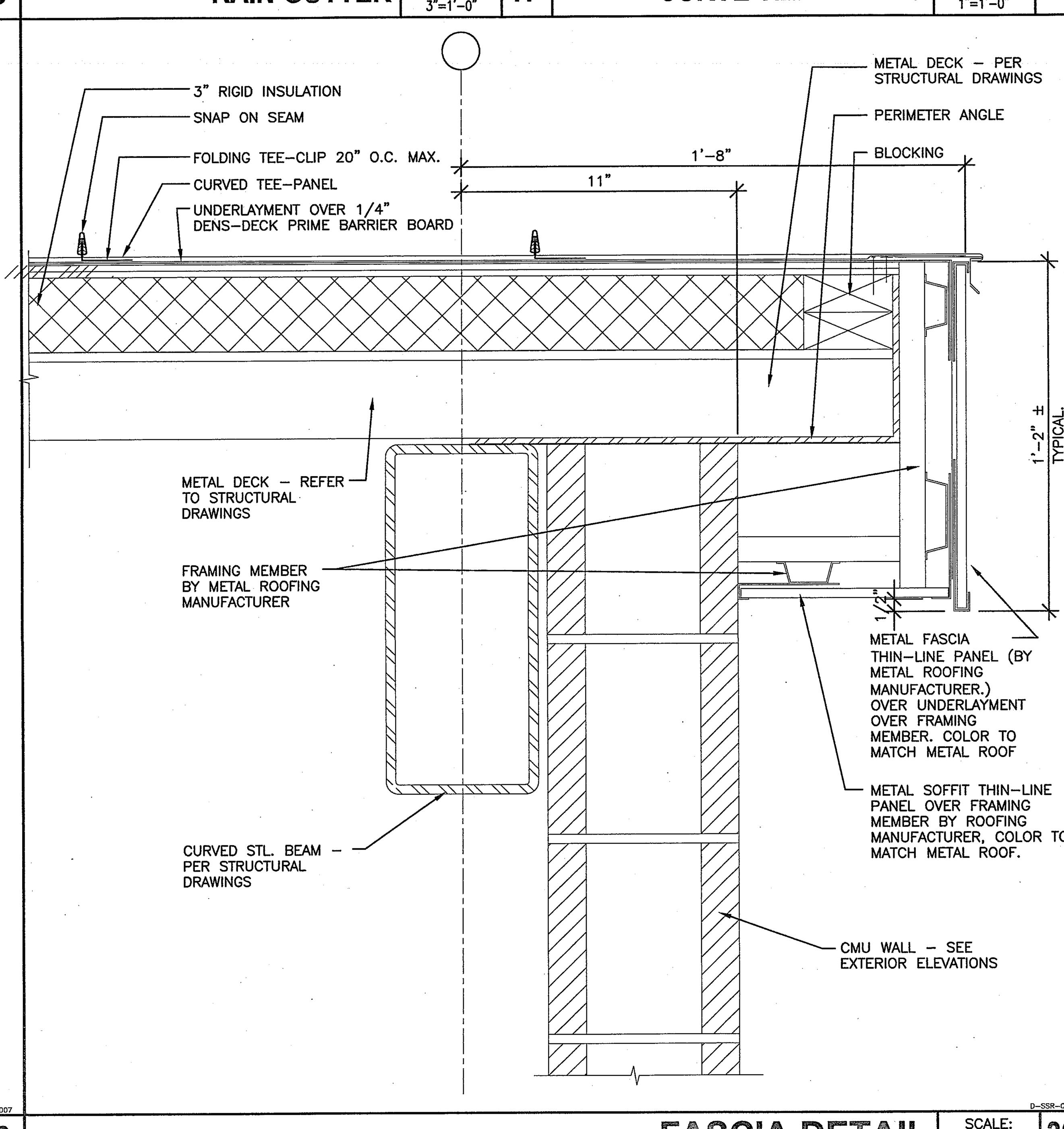

D-SSR-0008

FASCIA DETAIL SCALE: 3"=1'-0" **32**

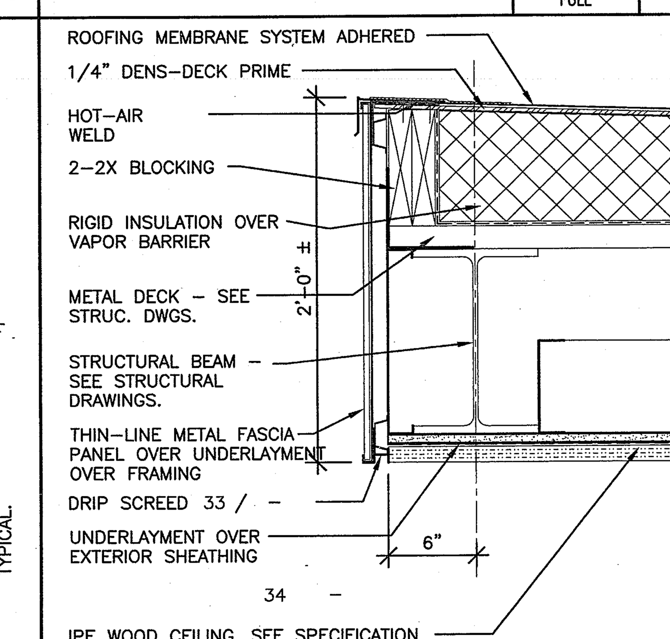

D-RF-0015

FASCIA SCALE: 1-1/2"=1'-0" **26**

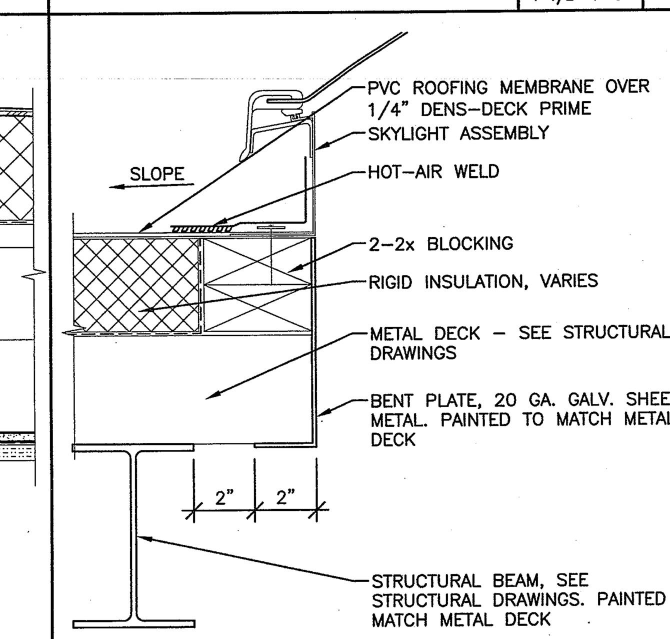

D-SKY-0001

SKYLIGHT SCALE: 3"=1'-0" **27**

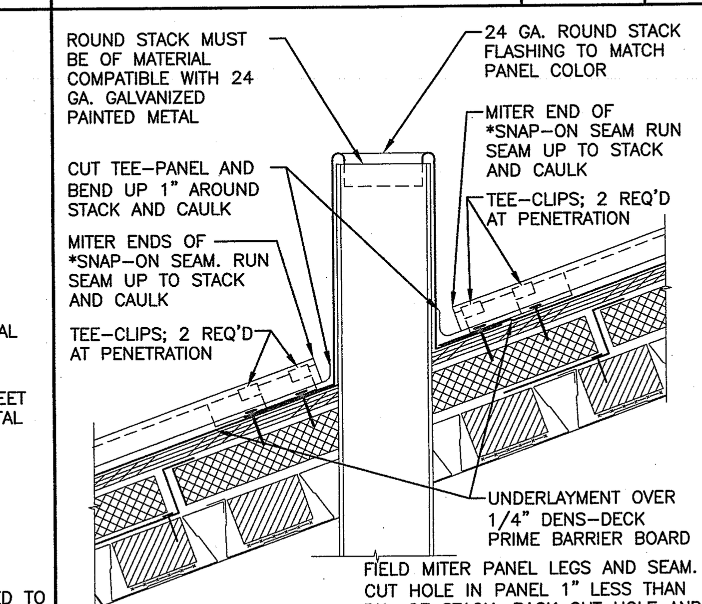

USE THIS DETAIL WHEN STACK IS CENTERED ON *SNAP-ON SEAM
*SNAP-ON SEAM IS COVERED UNDER US PATENT NO. 4,641,475

D-SSR-0009

VENT THROUGH ROOF SCALE: 1 1/2"=1'-0" **28**

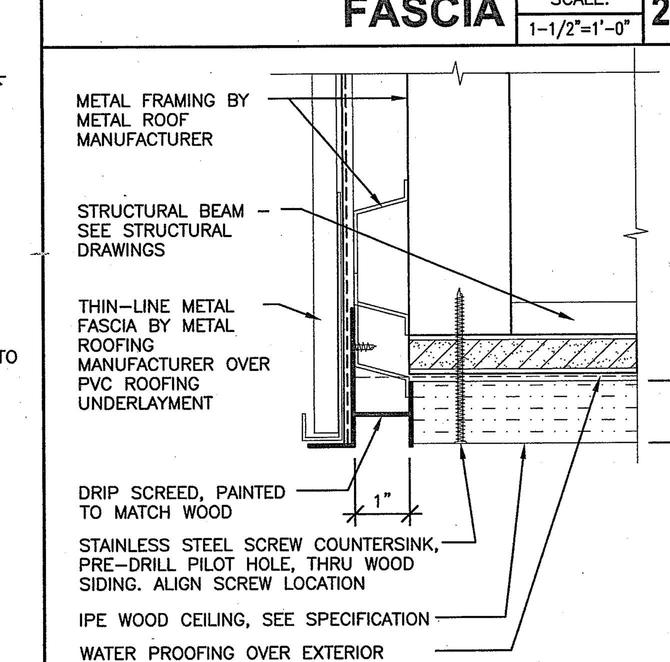

D-RVL-0001

DRIP SCREED SCALE: 3"=1'-0" **33**

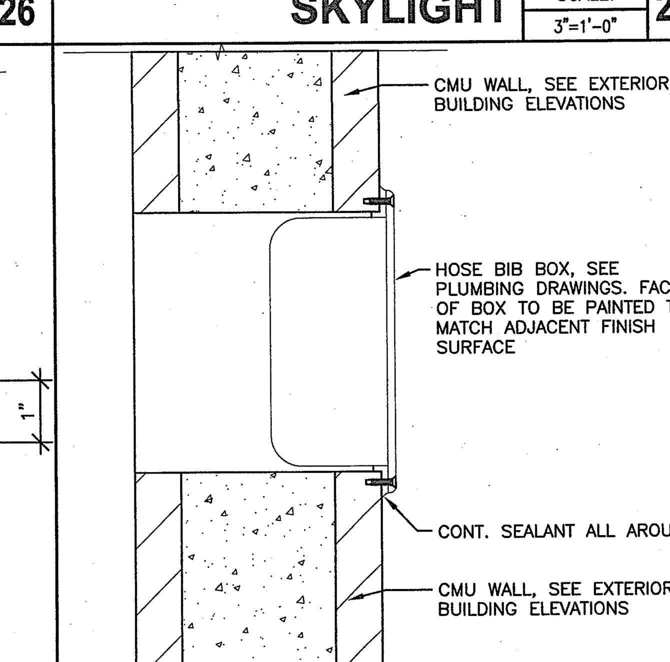

D-HB-0002

HOSE BIB BOX SCALE: 3"=1'-0" **34**

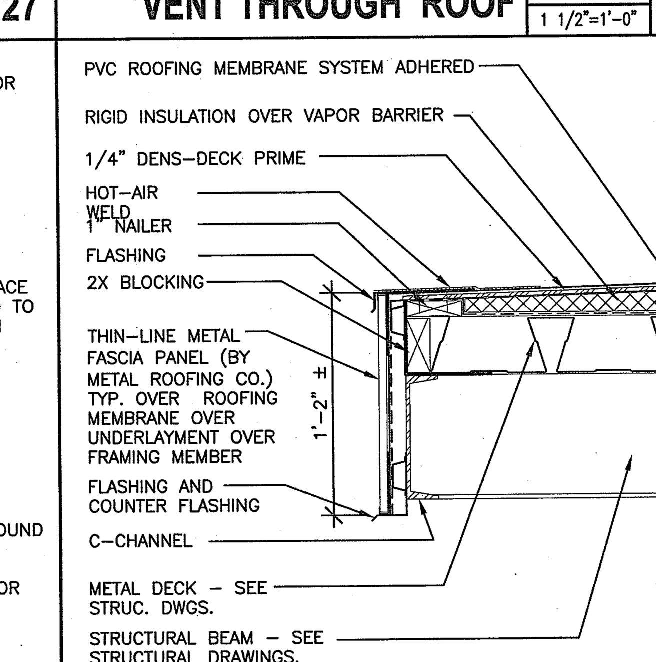

D-RF-0016

FASCIA @ CANOPY SCALE: 1-1/2"=1'-0" **35**

0742 COUNTY OF ORANGE HEALTH CARE AGENCY 401 SOUTH TUSTIN STREET

County of Orange
OC PUBLIC WORKS
Architecture & Engineering

0742 Revisions
Sym.	Descrip.	Date	By

Consultants
Drawn__ Chkd.__ Date__

A-E Seal (LICENSED ARCHITECT ALLEN L. HIBBS NO. C10511 REN. 7/31/2011 STATE OF CALIFORNIA)

A-E ALEXANDER + HIBBS, AIA, INC.
ALEXANDER + HIBBS, AIA, INC. Architecture and Planning 1200 N. JEFFERSON ST. SUITE A ANAHEIM, CALIFORNIA 92807 (714) 630-3666

Design DF, MS Chkd. AH Date Nov. 26, 2009

Sht Title DETAILS
Project COUNTY OF ORANGE HEALTH CARE AGENCY 401 SOUTH TUSTIN STREET
401 SOUTH TUSTIN STREET ORANGE, CA 92866
PROJ. NO. 100-042-P210-4200

Plan No. 52333-03608

Sheet A-7.4