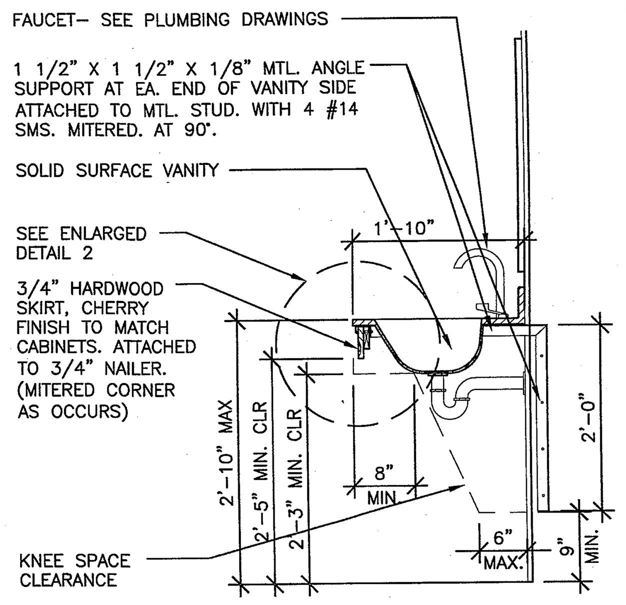

LAVATORY SCALE: 3/4"=1'-0" **1**

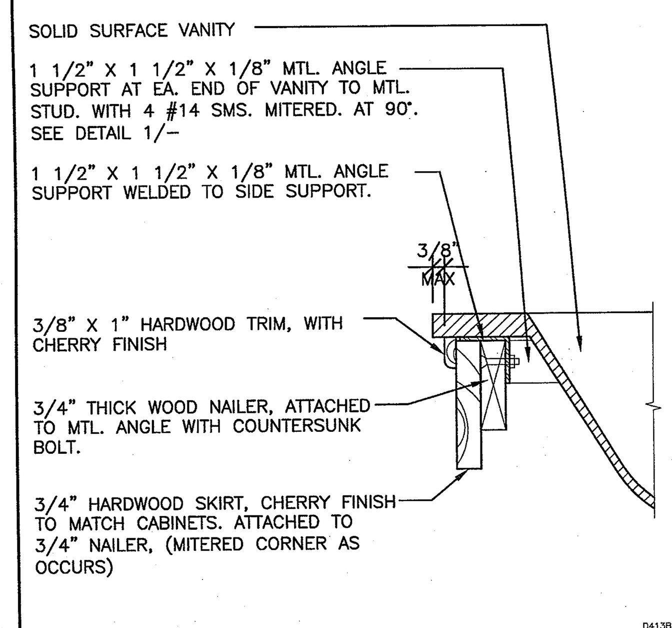

LAVATORY EDGE SCALE: 3"=1'-0" **2**

3

4

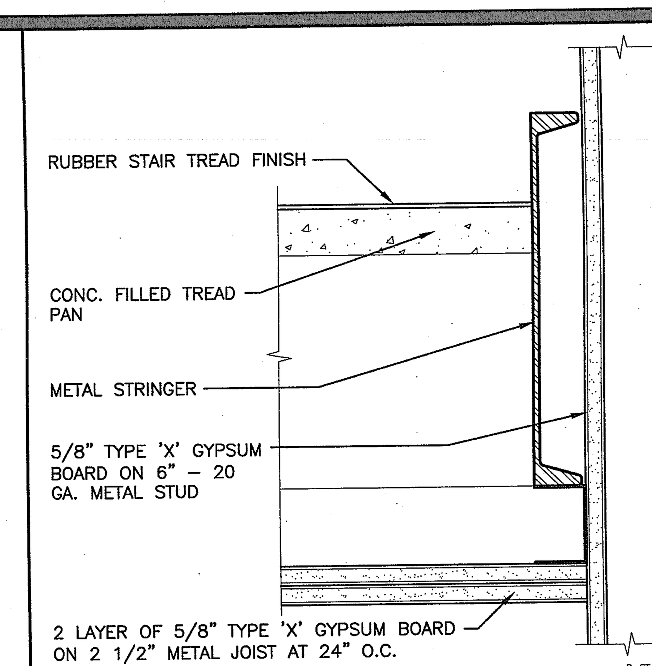

GYP. BD. CEILING @STAIRS SCALE: 3"=1'-0" **5**

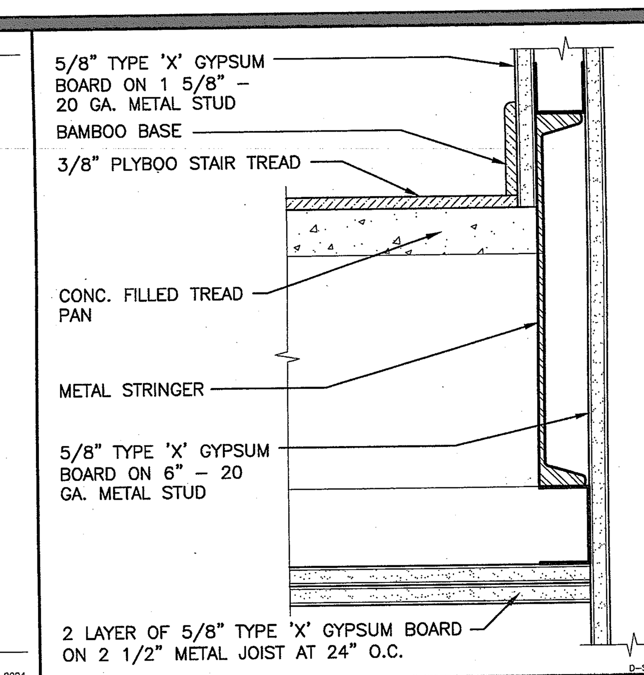

GYP. BD. CEILING @STAIRS SCALE: 3"=1'-0" **6**

W241-05

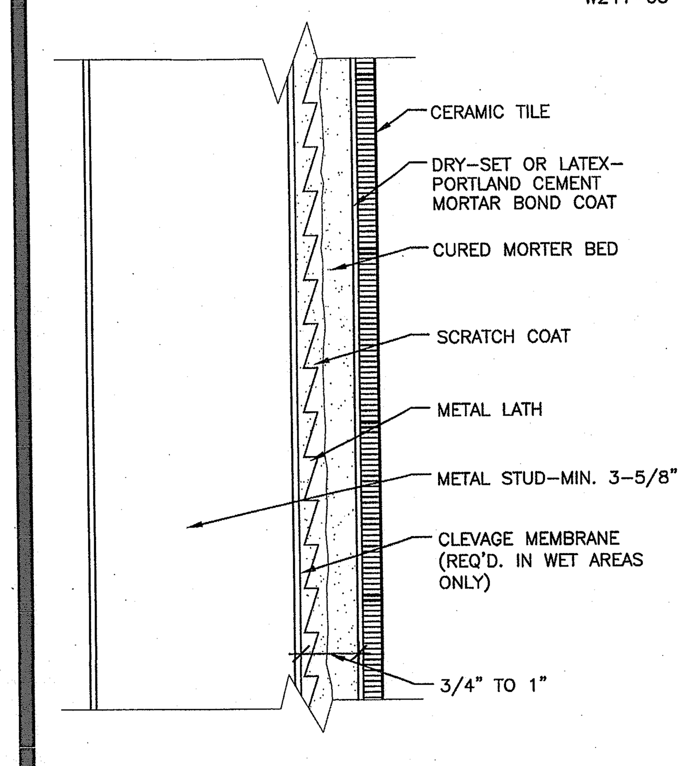

NOTES:

MATERIALS:
- MEMBRANE (ANSIA-2.1.8)-15 lb. ROOFING FELT OR 4-mil POLYETHYLENE FILM (REQUIRED IN WET AREAS ONLY).
- PORTLAND CEMENT-ASTM C150 TYPE 1.
- LIME-ASTM C206 TYPE S OR ASTM C270 TYPE S.
- SAND-ASTM C144.
- WATER-POTABLE.
- SCRATCH COAT- 1PART PORTLAND CEMENT, 1/2 PART LIME, AND 4 PARTS DRY SAND TO 5 PARTS DAMP SAND OR 1 PART PORTLAND CEMENT, 3 PARTS DRY SAND TO 4 PARTS DAMP SAND.
- MORTAR BED-1PART PORTLAND CEMENT 1/2 PART LIME AND 5 PARTS DAMP SAND UP TO 1 PART PORTLAND CEMENT, 1 PART LIME AND 7 PARTS DAMP SAND, BY VOLUME.
- DRY-SET MORTAR-ANSI A118.1.
- LATEX-PORTLAND CEMENT MORTAR-ANSI A118.4.
- METAL LATH-GALVANIZED OR PAINTED EXPANDED METAL LATH 3.4 lbs./sq. yd. DO NOT USE RIB LATH.
- METAL STUDS- ASTM C645.
- GROUT-ANSI A118.6 OR A118.7.

INSTALLATION SPECIFICATIONS:
- CURED MORTAR BED-ANSI A108.1B
- TILE-ANSI A108.5.
- GROUT-ANSI A108.10.

D294

TILE WALLS SCALE: 1-1/2"=1'-0" **15**

B411-05

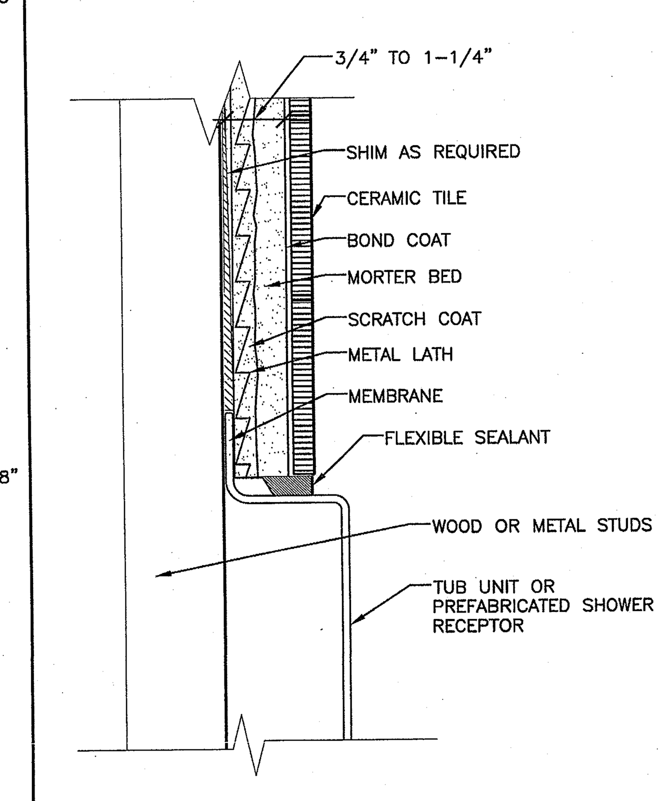

NOTES:

MATERIALS:
- MORTAR BED, LATH, AND MEMBRANE ANSI A108.1A.
- BOND COAT PORTLAND CEMENT ON A MORTAR BED THAT IS STILL WORKABLE. (FOR DRY-SET OR LATEX-PORTLAND CEMENT MORTAR ON A MORTAR BED CURED FOR A MIN. OF 20 HOURS @ 70°F OR ABOVE, FOLLOW METHOD W202.)
- GROUT-ANSI A118.6 OR A118.7.
- ELASTOMERIC CAULKING-SILICONE RUBBER-AFTER TILEWORK AND GROUT ARE DRY (ASTM C920).
- METAL STUDS-ASTM C645.

PREPARATION BY OTHER TRADES:
- OVER METAL STUDS-SEE METHOD W241.
- STUDS INSTALL SQUARE AND PLUMB.
- STUD SPACING NOT TO EXCEED 16" O.C.
- OPENING FOR RECESSED BATHTUBS-NOT TO EXCEED 1/2" MORE THAN TOTAL LENGTH OF TUB. BATHTUB-INSTALL LEVEL AND SUPPORT WITH METAL HANGERS OR ON END GRAIN WOOD BLOCKS.

INSTALLATION SPECIFICATIONS:
- TILE-ANSI A108.1A.
- GROUT-ANSI A108.10.

D297

BATHTUB/SHOWER WALLS SCALE: NONE **16**

B414-05

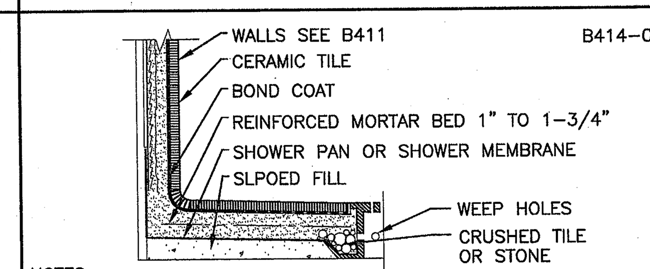

NOTES:

MATERIALS:
- MORTAR BED AND REINFORCING ANSI A108.1A.
- BOND COAT-PORTLAND CEMENT PASTE ON A MORTAR BED THAT IS STILL WORKABLE, OR DRY-SET MORTAR LATEX-PORTLAND CEMENT MORTAR ON A CURED BED.
- GROUT-ANSI A118.6 OR A118.7

PREPARATION BY OTHER TRADES:
- FROM SLOPE FOR MEMBRANE WITH CEMENT MORTAR OR PERFORMED LINERS.

PREPARATION BY TILE TRADE:
- SURROUND DRAIN WITH BROKEN PIECES OF TILE OR CRUSHED STONE TO PREVENT MORTAR FROM BLOCKING WEEP HOLES.

INSTALLATION SPECIFICATIONS:
- TILE-ANSI A108.1A, .1B, OR .1C.
- GROUT-ANSI A108.10.

D298

SHOWER WALLS SCALE: NONE **10**

F113-05

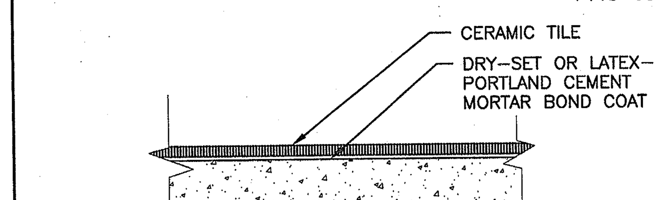

NOTES:

MATERIALS:
- MORTAR-USE ANSIA118.1 OR A118.4 FOR SLAB-ON-GRADE INSTALLATIONS. USE ONLY A MANUFACTURER'S MORTAR FOR ABOVE-GRADE STRUCTURAL SLABS.
- GROUT-USE ANSI A118.3, A118.6, A118.7, A118.8. FOR SLAB-ON-GRADE INSTALLATIONS; USE ONLY A MANUFACTURER'S DESIGNATED GROUT FOR ABOVE-GRADE STRUCTURAL SLABS.

PREPARATION BY OTHER TRADES:
- SLAB-STEEL TROWEL AND FINE BROOM FINISH FREE OF CURING COMPOUNDS. (WHEN USED, MECHANICAL SCARIFYING IS NECESSARY.)
- MAX. VARIATION IN THE SLAB 1/4" IN 10'-0" FROM THE REQUIRED PLANE.

INSTALLATION SPECIFICATIONS:
- TILE-ANSI A108.5.
- GROUT-ANSI A108.10.

D296

DRY- SET FLOOR TILE SCALE: NONE **11**

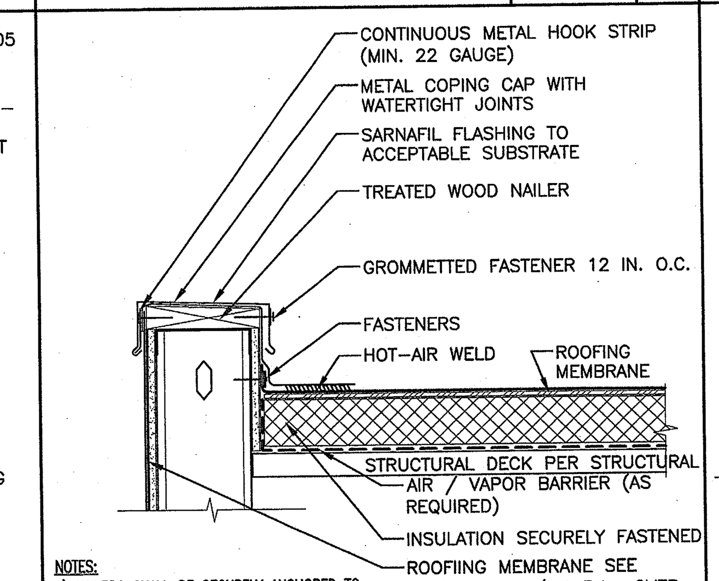

NOTES:
1) NAILERS SHALL BE SECURELY ANCHORED TO THE DECK TO RESIST A MINIMUM FORCE OF 300 POUNDS PER LINEAR FOOT. REFER TO FACTORY MUTUAL DATA SHEET 1-49.

D-RF-00017

COPING CAP @ PARAPET WALL SCALE: 1 1/2"=1'-0" **12**

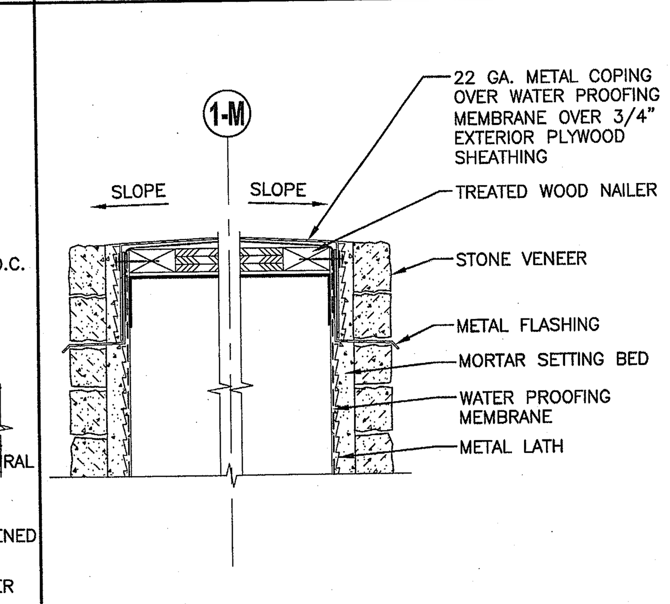

COPING CAP @ PILASTER SCALE: 3"=1'-0" **13**

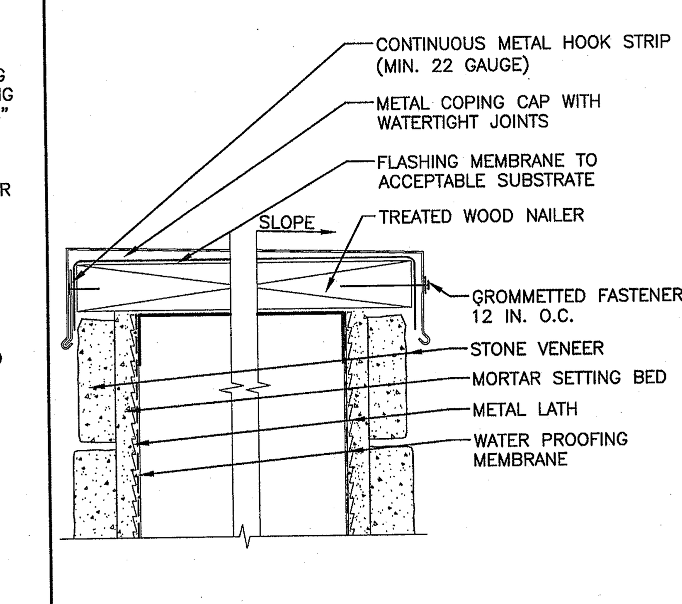

COPING CAP @ STONE WALL SCALE: 3"=1'-0" **14**

F111-05

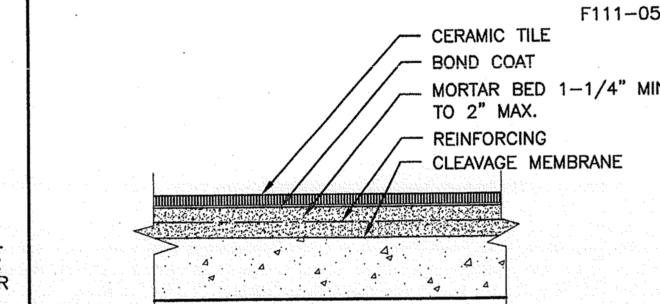

NOTES:

MATERIALS:
- MORTAR BED, REINFORCING AND CLEAVAGE MEMBRANE ANSIA108.1A.
- BOND COAT-PORTLAND CEMENT PASTE ON A MORTAR BED THAT IS STILL WORKABLE, OR DRY-SET MORTAR OR LATEX-PORTLAND CEMENT MORTAR ON A CURED BED.
- GROUT ANSIA118.6 OR A118.7

PREPARATION BY OTHER TRADES:
- SLAB DEPRESSION TO BE ACCURATE WITH STEEL TROWEL FINISH.
- MAX. VARIATION IN THE SLAB-1/4" 10'-0" FROM THE REQUIRED PLANE.

INSTALLATION SPECIFICATIONS:
- TILE-ANSI A108.1A, .1B. OR .1C.
- GROUT-ANSI A108.10.

D295

TILE FLOOR SCALE: 1-1/2"=1'-0" **17**

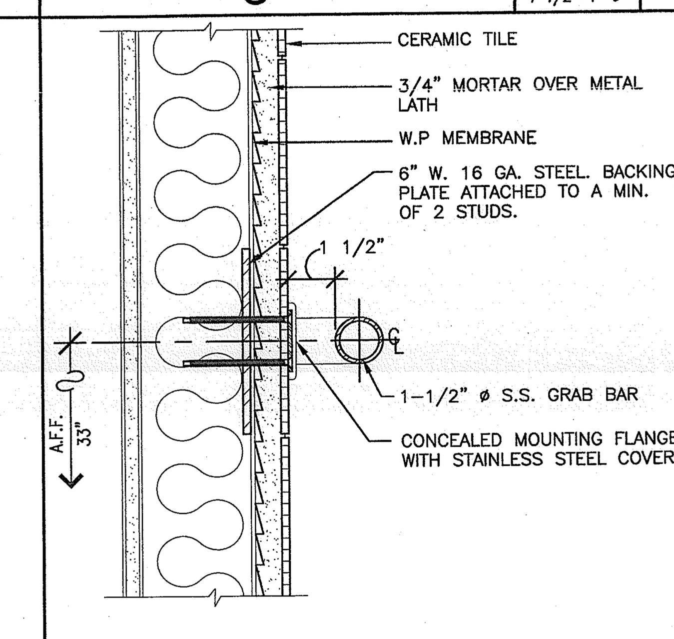

GRAB BAR MOUNTING SCALE: 3"=1'-0" **19**

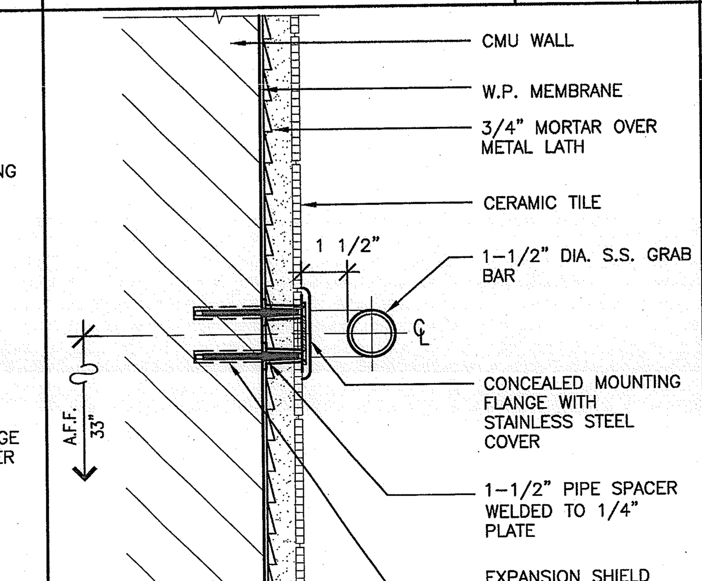

GRAB BAR MOUNTING SCALE: 3"=1'-0" **20**

NOTE:
SEE PLANS & ELEVATIONS FOR LENGTH & POSITION OF GRAB BARS

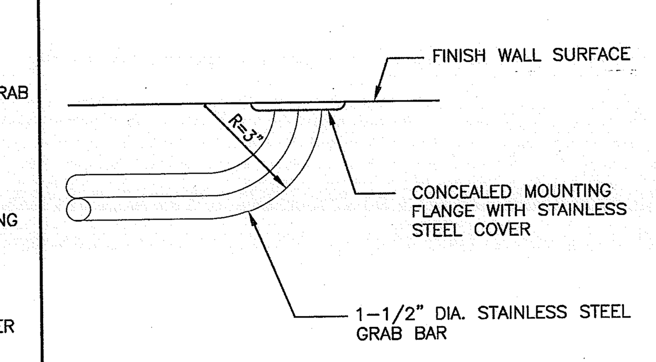

SEE A-0.1 FOR ADDITIONAL INFORMATION

D018

GRAB BAR END RETURN SCALE: 3"=1'-0" **21**

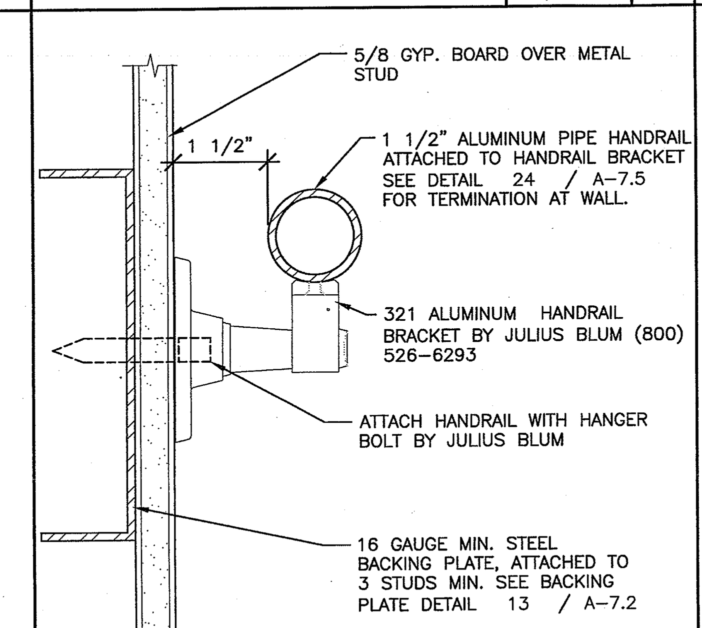

HANDRAIL AT GYP. BD. SCALE: 6" = 1'-0" **23**

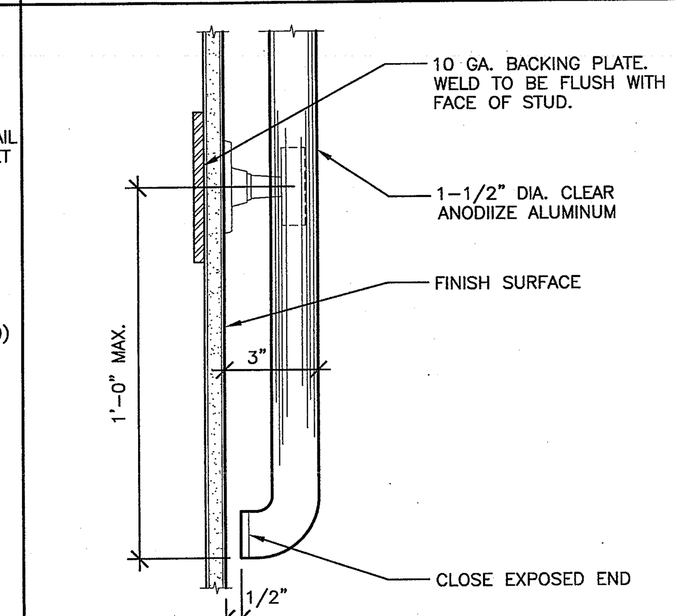

HANDRAIL RETURN SCALE: 3"=1'-0" **24**

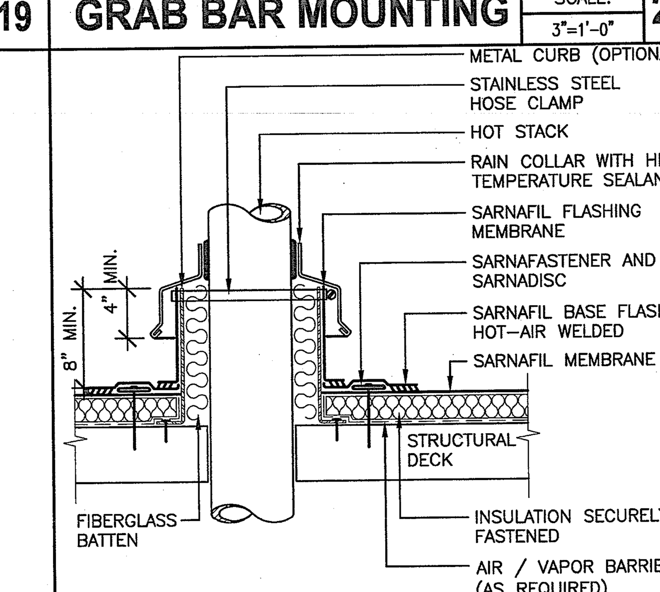

NOTE:
1) SARNAFIL MEMBRANE SHALL NOT BE IN CONTACT WITH SURFACES HAVING SUSTAINED TEMPERATURES ABOVE 160°F.
2) VAPOR BARRIER SHALL BE SEALED AT EDGES.

D-RF-0020

HEATED STACK FLASHING SCALE: N.T.S. **27**

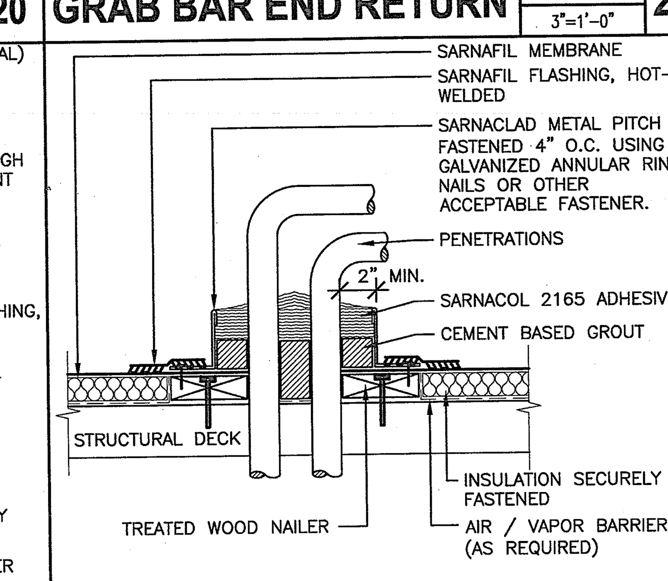

NOTE:
1) PITCH POCKETS ARE TO BE ELIMINATED WHERE POSSIBLE.
2) SEALANT IS A MAINTENANCE ITEM. MAINTENANCE IS NOT COVERED UNDER THE SIKA SARNAFIL WARRANTY.
3) VAPOR BARRIER SHALL BE SEALED AT EDGES

D-RF-0019

PITCH POCKET SCALE: N.T.S. **28**

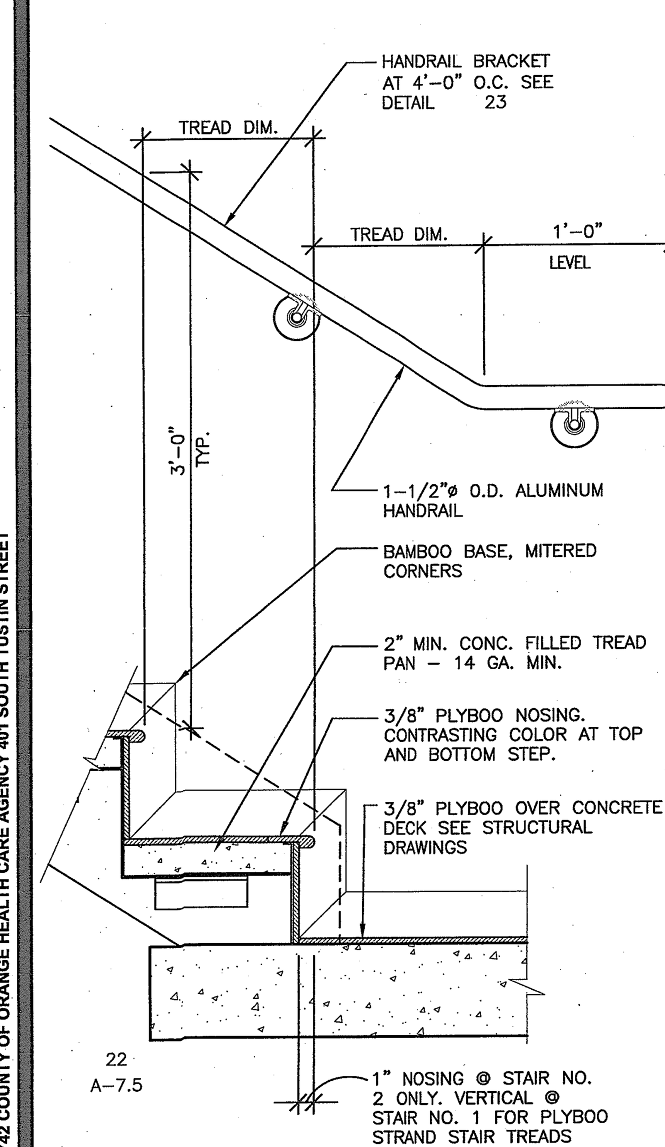

STAIR - STR1 SCALE: 1-1/2"=1'-0" **29**

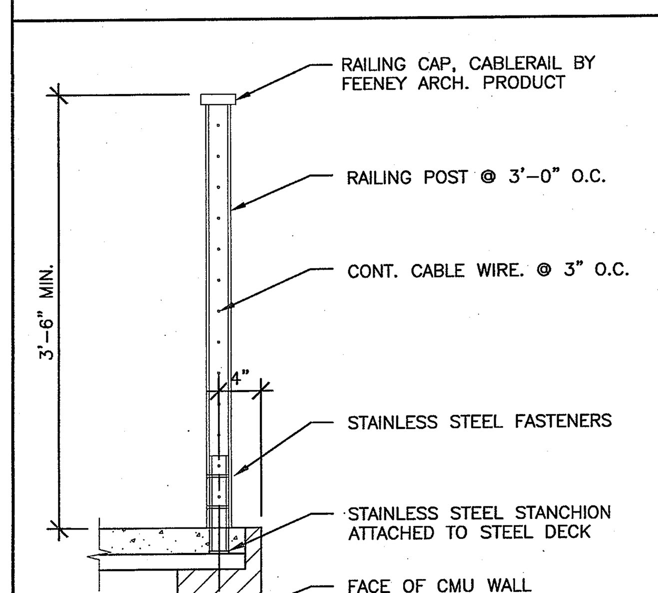

CABLERAIL @ BALCONY SCALE: 1"=1'-0" **30**

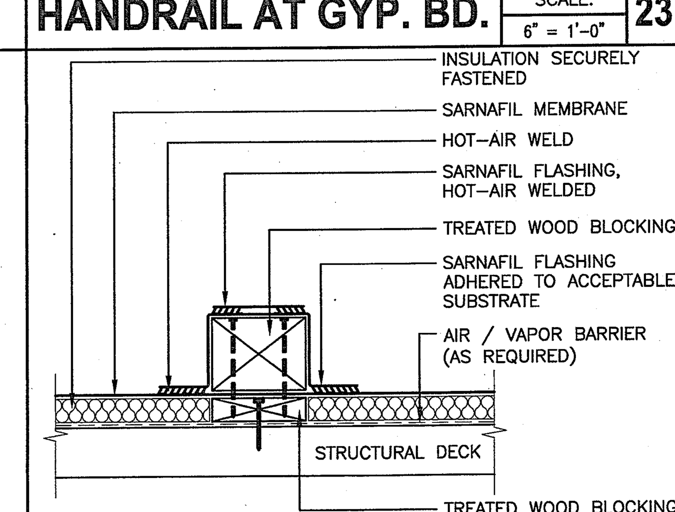

NOTE:
1) WEIGHT OF UNIT TO BE EVENLY DISTRIBUTED OVER CROSS-SECTIONAL AREA OF EXPOSED WOOD NAILER.
2) IF WEIGHT OF UNIT EXCEEDS MAXIMUM ALLOWED BY INSULATION MANUFACTURER, A TREATED WOOD NAILER BELOW THE SARNAFIL MEMBRANE IS REQUIRED.
3) VAPOR BARRIER SHALL BE SEALED AT EDGES.

D-RF-0021

PROTECTED WOOD SLEEPER SCALE: N.T.S. **31**

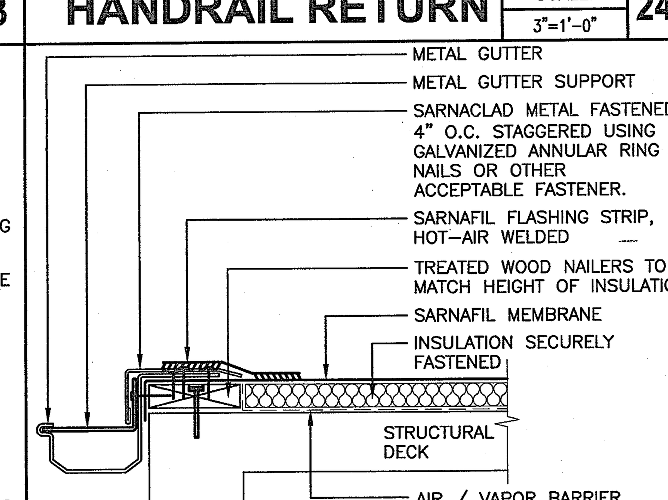

NOTE:
1) NAILERS SHALL BE SECURELY ANCHORED TO THE DECK TO RESIST A MINIMUM FORCE OF 300 POUNDS PER LINEAR FOOT. FOLLOW FACTOR MUTUAL LOSS PREVENTION DATA SHEET 1-49 RECOMMENDATIONS.
2) THE THICKNESS OF THE NAILER SHALL MATCH THE HEIGHT OF THE INSULATION OR SURFACE TO WHICH THE MEMBRANE IS TO BE APPLIED.
3) VAPOR BARRIER SHALL BE SEALED AT EDGES.

D-RF-0022

GUTTER EDGE SCALE: N.T.S. **32**

0742 COUNTY OF ORANGE HEALTH CARE AGENCY 401 SOUTH TUSTIN STREET

County of Orange
OC PUBLIC WORKS
Architecture & Engineering

Revisions
Sym.	Descrip.	Date	By
0742			

Consultants

Drawn___ Chkd.___ Date___

A-E Seal
LICENSED ARCHITECT ALLEN L. HIBBS NO. C10511 REN. 7/31/2011 STATE OF CALIFORNIA

A-E ALEXANDER + HIBBS, AIA, INC.
ALEXANDER + HIBBS, AIA, INC. Architecture and Planning 1200 N. JEFFERSON ST. SUITE A ANAHEIM, CALIFORNIA 92807 (714) 630-3688

Design DA, MS Chkd. AH Date Nov. 26, 2009

Sht Title DETAILS
Project COUNTY OF ORANGE HEALTH CARE AGENCY 401 SOUTH TUSTIN STREET
401 SOUTH TUSTIN STREET ORANGE, CA 92866
PROJ. NO. 100-042-P210-4200

Plan No. 52333-03608

Sheet A-7.5