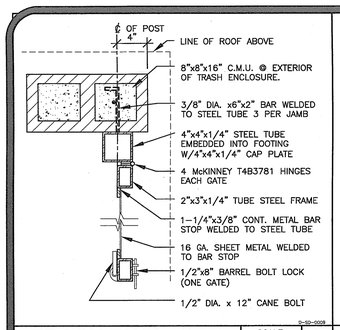

TRASH ENCL. GATE SCALE: 1-1/2"=1'-0" 1

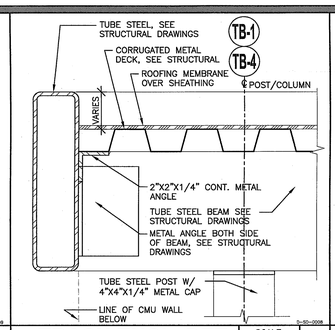

TRASH ENCL. DET. SCALE: 3"=1'-0" 2

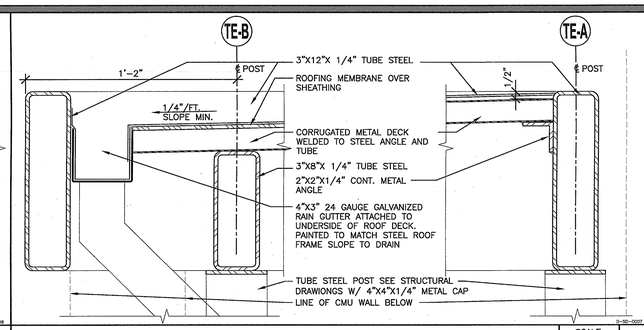

TRASH ENCLOSURE DETAIL SCALE: 3"=1'-0" 4

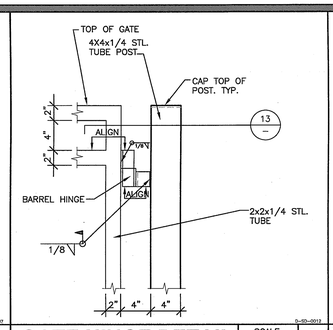

GATE HINGE DETAIL SCALE: 1 1/2"=1'-0" 5

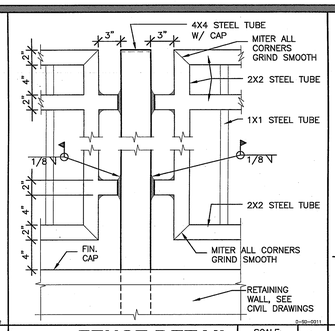

FENCE DETAIL SCALE: 1-1/2"=1'-0" 6

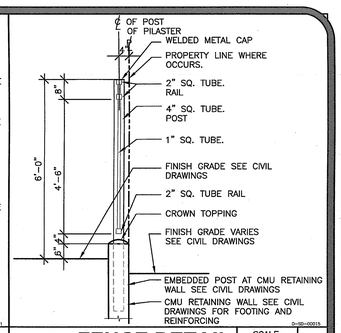

FENCE DETAIL SCALE: 1/2"=1'-0" 7

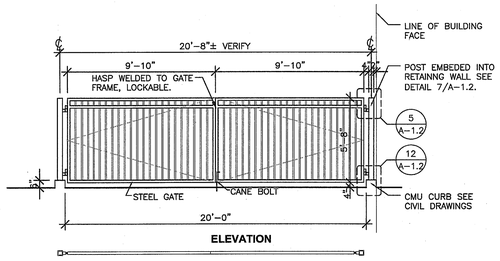

GATE ELEVATION AND PLAN SCALE: 1/4"=1'-0" 9

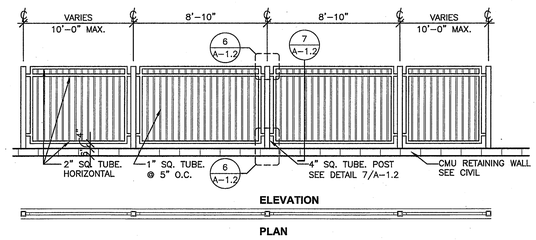

FENCE ELEVATION AND PLAN SCALE: 1/4"=1'-0" 11

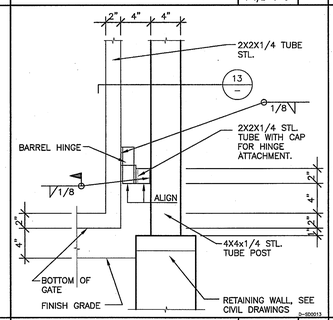

GATE HINGE DETAIL SCALE: 1 1/2"=1'-0" 12

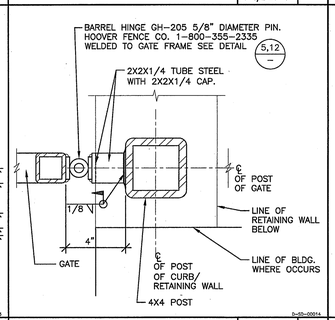

GATE DETAIL SCALE: 3"=1'-0" 13

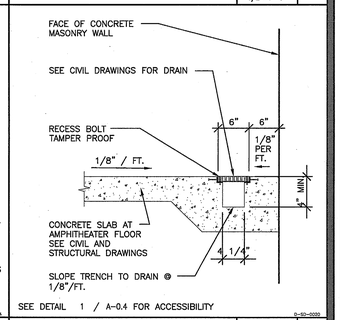

DRAINAGE GRATE SCALE: 1"=1'-0" 14

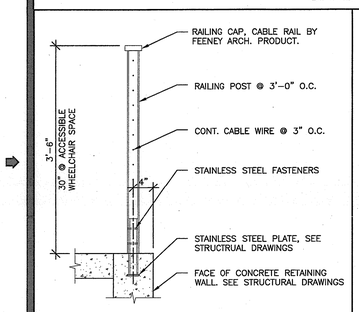

CABLERAIL @ AMPHITHEATER SCALE: 1"=1'-0" 15

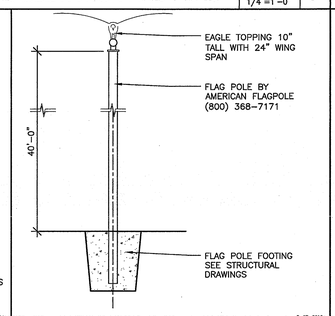

FLAG POLE DETAIL SCALE: 1/4"=1'-0" 16

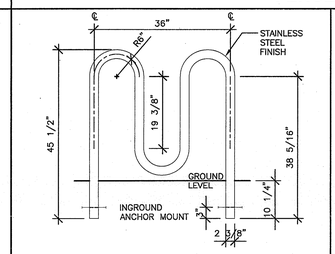

MODEL NO.	# OF BICYCLES	RACK LENGTH	
RB05	2	38.375"	97.5 cm
RB07	7	62.375"	158.4 cm
RB09	9	86.375"	219.4 cm
RB11	11	110.375"	280.4 cm

BIKE RACK SCALE: 3/4"=1'-0" 17

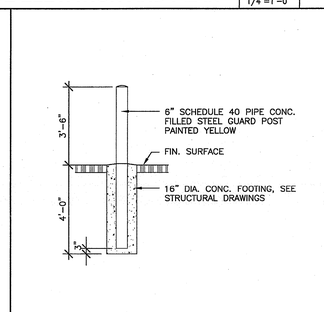

GUARD POST SCALE: 3/8"=1'-0" 18

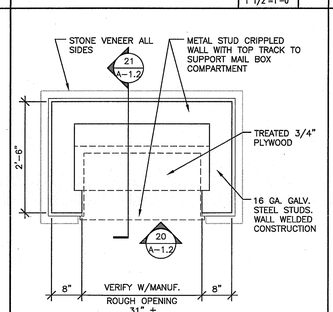

MAIL BOX PLAN SCALE: 3/4"=1'-0" 19

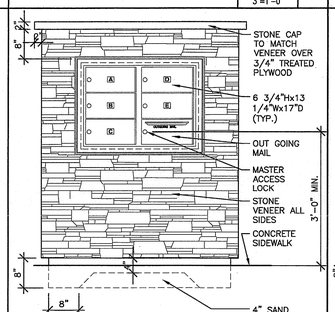

MAIL BOX ELEVATION SCALE: 3/4"=1'-0" 20

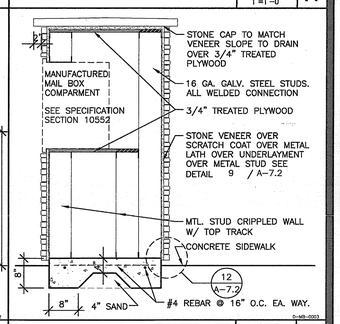

MAIL BOX SECTION SCALE: 3/4"=1'-0" 21

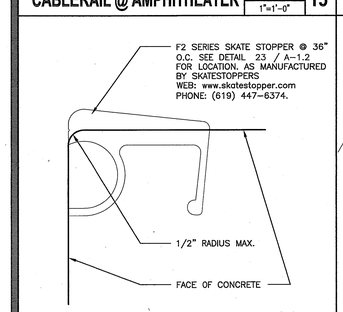

SKATE BOARD STOP SCALE: 6"=1'-0" 22

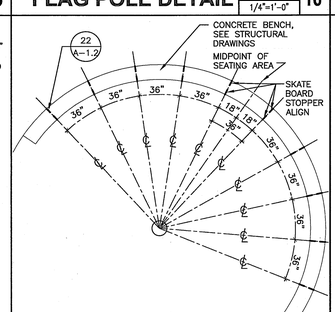

STAKE BOARD STOP PLAN SCALE: 1/4"=1'-0" 23

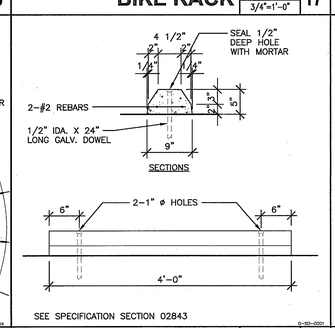

SEE SPECIFICATION SECTION 02843

WHEEL STOP SCALE: 1"=1'-0" 24

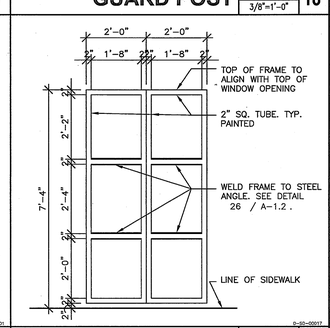

DECORATIVE TRELLIS SCALE: 1/2"=1'-0" 25

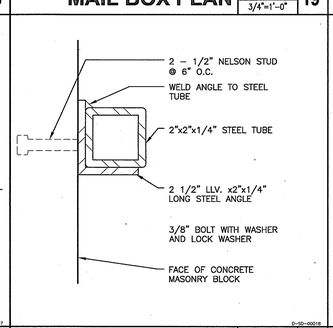

DECORATIVE TRELLIS ATTACHEDMENT SCALE: 6"=1'-0" 26

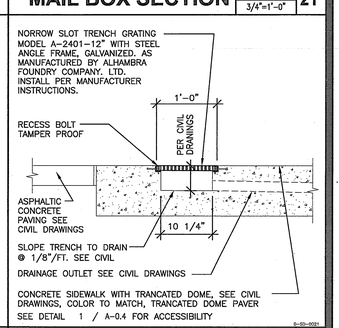

DRAINAGE GRATE SCALE: 1"=1'-0" 28

County of Orange
OC PUBLIC WORKS
Architecture & Engineering

Revisions: 0742 | Sym. | Descrip. | Date | By

Consultants: Drawn | Chkd | Date

A-E Seal

A-E: ALEXANDER + HIBBS, AIA, INC.
Date: Nov 26, 2009
Chkd: A.H.
Design: D.F., M.S.

Sht Title: SITE DETAILS
Project: COUNTY OF ORANGE HEALTH CARE AGENCY
401 SOUTH TUSTIN STREET
401 SOUTH TUSTIN STREET
ORANGE, CA 92866
PROJ. NO. 100-042-P210-4200

Plan No. 52333-03608

Sheet A-1.2

0742 COUNTY OF ORANGE HEALTH CARE AGENCY 401 SOUTH TUSTIN STREET