FINISH SCHEDULE BUILDING 4

NO.	ROOM NAME	FLR	BASE	WALLS N MTL.	WALLS N FIN.	WALLS E MTL.	WALLS E FIN.	WALLS S MTL.	WALLS S FIN.	WALLS W MTL.	WALLS W FIN.	CEILING MTL.	CEILING FIN.	CEILING HGT.	NO.	REMARKS
4–100	WORKROOM	CONC	RB	–	–	GB3	P22	–	–	–	–	–	–	–	4–100	
4–101	STORAGE	CONC	RB	–	–	GB1	P7	–	–	GB1	P22	–	–	–	4–101	
4–102	OFFICE	C4	RB	GB1	P7	GB1	P21	GB1	P7	GB1	P7	GB1	P20	–	4–102	
4–103	RESTROOM	TP2	TP2	–	–	–	–	–	–	–	–	GB1	P20	–	4–103	SEE INTERIOR ELEVATIONS–TILE & PATTERN, NOTE 1
4–104	HALL	CONC	RB	–	–	GB1	P7	GB1	P7	–	–	–	–	–	4–104	
4–105	COMP.	CONC	RB	–	–	–	–	–	–	GB1	P20	GB1	P20	–	4–104	

FINISH NOTES

1. WALLS WITHIN 2 FEET OF FRONT AND / OR SIDE OF URINALS AND WATER CLOSET WILL BE SMOOTH AND OF AHARD NON–ABSORBENT SURFACE TO A HEIGHT OF 4'–0".
2. INTERIOR FINISH WALLS AND CEILING FINISH SHALL BE CLASSIFIED IN ACCORDANCE WITH ASTM E–84.
   BUILDING 3 I–OCCUPANCY – CLASS B

   CLASS B: FLAME SPREAD 26–75:
   SMOKE DEVELOPMENT 0–450.

DOOR SCHEDULE BUILDING 4

NO.	SIZE WIDTH	SIZE HEIGHT	SIZE THK.	CONSTRUCTION TYPE	CONSTRUCTION DOOR	CONSTRUCTION FRAME	FINISH DOOR	FINISH FRAME	LBL	HDW SET	SGN	DETAILS HEAD	DETAILS JAMB	DETAILS THRSH	DETAILS MUL.	REMARKS (SEE DOOR NOTES)
4–100A	3'–0"	7'–0	–	D	HM	HM	P10	P10	–	03	3	2/A-7.1	2/A-7.1	20/A-7.1	–/–	LOUVER 24X24
4–100B	8'–0"	10'–0"	–	G	–	–	P10	–	–	21	–	8/A-7.1	1/A-7.1	–/–	–/–	
4–101	3'–6"	8'–0"	–	H	–	–	–	–	–	22	–	–/–	–/–	–/–	–/–	
4–102	3'–0"	7'–0"	–	D	SC	KD	PL3	P10	–	05	2	3/A-7.1	3/A-7.1	19/A-7.1	–/–	
4–103	3'–0"	7'–0"	–	D	SC	KD	PL3	P10	–	04	4*	10/A-7.1	10/A-7.1	28/A-7.1	–/–	* UNISEX
4–105	3'–0"	7'–0"	–	D	HM	HM	P10	P10	–	10	3	2/A-7.1	2/A-7.1	20/A-7.1	–/–	LOUVER 24X24

DOOR SIGN NOTES

(SEE DETAILED DESCRIPTIONS IN SPECIFICATION SECTION 10400)

1. VINYL TYPE ON GLASS.
2. CHANGEABLE INSERT TYPE – BLACK
3. EXTERIOR TYPE – BLACK
4. ACCESSIBILITY TYPE – SEE DETAILS 12/A–0.5 & 13/A–0.5

WINDOW SCHEDULE

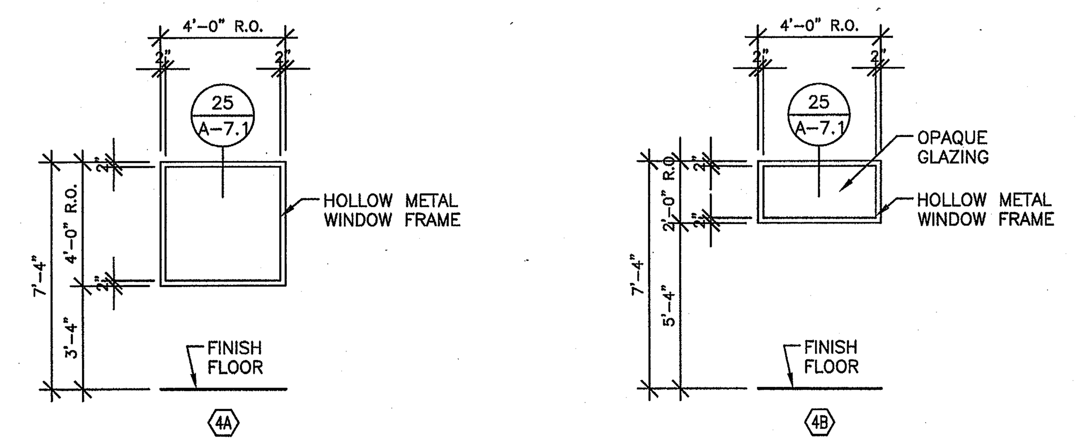

DOOR TYPE & NOTES

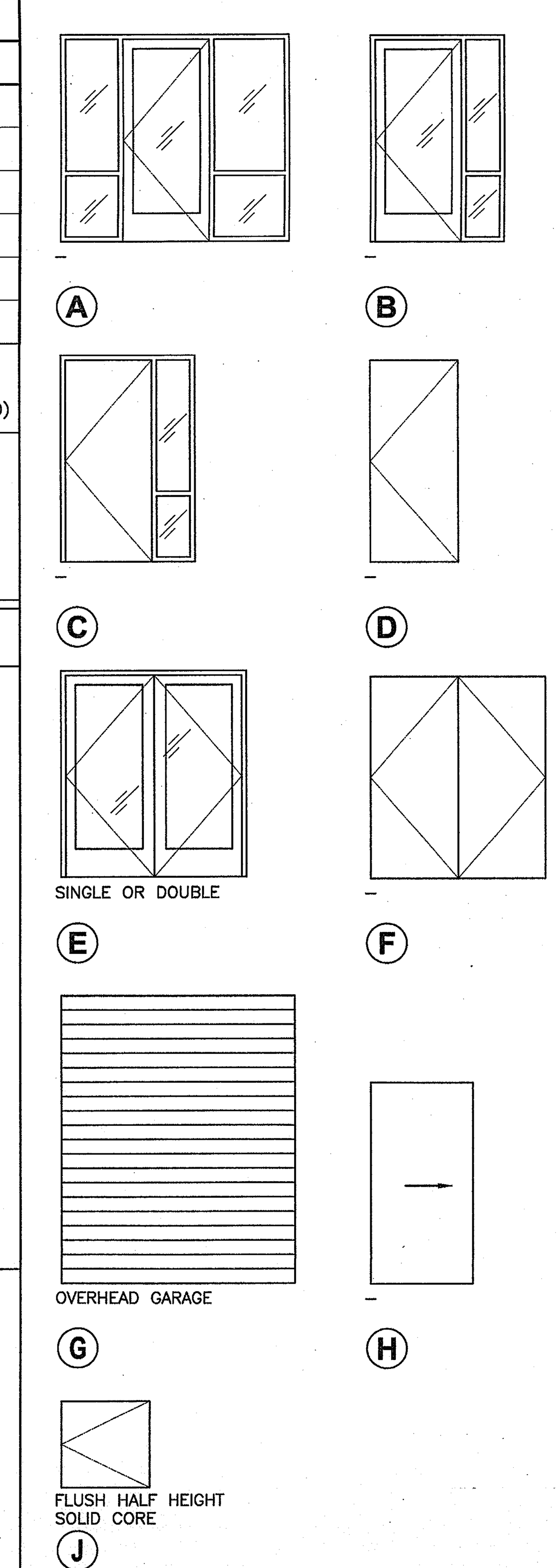

DOOR SCHEDULE NOTES

1. EXIT DOORS SHALL BE OPENABLE FROM THE INSIDE WITHOUT THE USE OF A KEY OR ANY SPECIAL KNOWLEDGE OR EFFORT (TYPICAL ALL EXIT DOORS).
2. PROVIDE 'S' LABEL ON ALL RATED DOORS PER UBC SEC. 1004.3.4.3.2.1. DOOR SHALL COMPLY W/ UBC STANDARD 7–2.
3. ALL GLAZING IN DOORS OR WITHIN 40" OF LOCKING DEVICE SHALL BE FULLY TEMPERED. EACH LIGHT OF SAFETY GLAZING SHALL BE PERMANENTLY IDENTIFIED PER TITLE 24 SECTION 2406.2
4. MAIN ENTRY DOORS SHALL HAVE A SIGN IN CONTRASTING LETTERS OF 1 INCH OR MORE IN HEIGHT STATING: "THIS DOOR TO REMAIN UNLOCKED DURING BUSINESS HOURS"
5. ALL FIRE RATED DOORS SHALL BE MAINTAINED SELF–CLOSING OR SHALL BE AUTOMATIC CLOSING BY ACTUATION OF A SMOKE DETECTOR IN ACCORDANCE WITH SEC. SEC. 713.2. AND SEC. 425.8.7.1
6. UNDERCUT DOOR (UC) OR LOUVERED (LV) DOORS, COORDINATE WITH MECHANICAL.
7. MAXIMUM EFFORT TO OPERATE DOORS SHALL NOT EXCEED 5 POUNDS FOR BOTH INTERIOR AND EXTERIOR DOORS.
8. PROVIDE FOR A FLUSH MOUNT DOOR POSITION SWITCH (DPS) IN TOP EDGE OF DOOR AND DOOR FRAME. PROVIDE CONDUIT TO DOOR FRAME AS INDICATED ON ELECTRICAL DRAWINGS AND IN SPECIFICATIONS.
9. PROVIDE MASTIC SEALANT AT ALL EXTERIOR DOOR THRESHOLD AND STOREFRONT WINDOW.

ABBREVIATIONS

ACT	ACOUSTICAL CEILING TILE & T–BAR
AL	METAL–FRAMED STOREFRONTS 08410
ALC	ALUMINUM CLAD
FG	FIBERGLASS
HM	HOLLOW METAL; STEEL DOORS, WINDOWS & FRAMES 08110
KD	KNOCKDOWN; PREFINISHED STEEL DOOR FRAMES 08117
PL	PLASTIC LAMINATE
SC	SOLID CORE
SCS	SOLID CORE STEEL
WD	WOOD
WF	WOOD FRAME
WGL	WOOD / GLASS
UC	UNDERCUT DOOR
LV	LOUVERED DOOR
/	INTERIOR FINISH / EXTERIOR FINISH
GB1	5/8" GYP. BOARD
GB2	5/8" TYPE X GYP. BOARD
GB3	5/8" HIGH IMPACT GYP. BOARD
GB4	5/8" TYPE X WATER RESISTANT GYP. BOARD

FINISH ABBREVIATIONS

CARPET:

C1 VENDOR: INTERFACE FLOR; COLLECTION: PIETRA; STYLE: BRESCIA; COLOR: 8862 VERDE

C2 VENDOR: INTERFACE FLOR; COLLECTION: FLATIRON; STYLE: 1ST AVENUE; COLOR: 8139 SOAPSTONE

C3 VENDOR: INTERFACE FLOR; COLLECTION: FLATIRON; STYLE: 2ND AVENUE; COLOR: 8162 WOOSTER

C4 VENDOR: INTERFACE FLOR; STYLE: ENTROPY; COLOR: 7200 VARIATIONS

C5 VENDOR: INTERFACE FLOR; STYLE: ENTROPY; COLOR: 7243 JUNIPER

CONCRETE:

CONC CONCRETE WITH SEALER SEE SPEC. SECTION 03356.

CONC1 CONCRETE WITH WATERPROOF DECK SURFACE SEE SPEC. SECTION 07350

CORK:

CORK VENDOR: WINCANDERS; PRODUCT: SERIES 1000, ORIGINALS, ACCENT 0141001

COUNTERTOP:

CT1 VENDOR: PAPERSTONE; COLOR: MOCHA

CT2 VENDOR: CAESARSTONE; STYLE: 2370 MOCHA

CT3 VENDOR: CAESARSTONE; STYLE: 4250 JERUSALEM SAND

CT4 VENDOR: CAESARSTONE; STYLE: 2141 BLIZZARD

METAL:

MT VENDOR: BERRIDGE MANUF. CO.; COLOR: ZINC–COTE

PAINT:

P1 VENDOR: DUNN EDWARDS; COLOR: DE6213 FINE GRAIN; FINISH: SATIN

P2 VENDOR: DUNN EDWARDS; COLOR: DE6212, CRISP MUSLIN; FINISH: SATIN

P3 VENDOR: DUNN EDWARDS; COLOR: DEC750, BISON BEIGE; FINISH: SATIN

P4 VENDOR: DUNN EDWARDS; COLOR: DE5541, TRAILING VINE; FINISH: SATIN

PAINT CONTINUED:

P5 VENDOR: DUNN EDWARDS; COLOR: DE5540, TINTED MINT; FINISHI SATIN

P6 VENDOR: DUNN EDWARDS; COLOR: DE6249, TRINITY ISLANDS; FINISH: SATIN

P7 VENDOR: DUNN EDWARDS; COLOR: DE5770, SMOKE AND MIRRORS; FINISH: SATIN

P8 VENDOR: DUNN EDWARDS; COLOR: DE6247, GARDEN PEBBLE; FINISH: SATIN

P9 VENDOR: DUNN EDWARDS; COLOR: DE6248, SPOOKY; FINISH: SATIN

P10 VENDOR: DUNN EDWARDS; COLOR: DEC756, WEATHERED BROWN; FINISH: SATIN

P11 VENDOR: DUNN EDWARDS; COLOR: DE5774, THUNDERCLOUD; FINISH: SATIN

P12 VENDOR: DUNN EDWARDS; COLOR: DE6250, FAIRBANK GREEN; FINISH SATIN

P13 VENDOR: DUNN EDWARDS; COLOR: DE6330, WATERLOO; FINISH: SATIN

PAINT CONTINUED:

P14 VENDOR: DUNN EDWARDS; COLOR: DE6331, BAY OF HOPE; FINISH: SATIN

P15 VENDOR: DUNN EDWARDS; COLOR: DE6332, GLEN FALLS; FINISH: SATIN

P16 NOT USED

P17 NOT USED

P18 VENDOR: DUNN EDWARDS; COLOR: DE6169, MILK MUSTACHE; FINISH: SATIN

P19 VENDOR: DUNN EDWARDS; COLOR: DE6170, RICE BOWL; FINISH: SATIN

P20 VENDOR: DUNN EDWARDS; COLOR: DEC765, BONE; FINISH: SATIN

P21 VENDOR: DUNN EDWARDS; COLOR: DE5772, BLUE SPRUCE; FINISH: SATIN

P22 VENDOR: DUNN EDWARDS; COLOR: DE5773, STONE SILVER; FINISH: SATIN

P23 VENDOR: DUNN EDWARDS; COLOR: DE6374, SILVER POLISH; FINISH: SATIN

PLASTIC LAMINATE:

PL1 VENDOR: PIONITE; COLOR: ST604, NUBIAN BROWN; FINISH: SUEDE

PL2 VENDOR: ARBORITE; COLOR: P–297 CA, TATAMI WASABI

PL3 VENDOR: WILSONART; COLOR: 7933T–07, CAFELLE

TOPSET RUBBER BASE:

RB VENDOR: JOHNSONITE; COLOR: 167 FUDGE

STR1 RUBBER STAIR TREAD AND FINISH, BY JOHNSONITE. COLOR 167 FUDGE RAISED ROUND TREAD. CONTRASTING STRIPE AT TOP AND BOTTOM OF STAIRS SHALL BE COLOR 194 ANTIQUE WHITE

TILE (CERAMIC):

TC1 VENDOR: BEDROSIANS; COLLECTION: BELLISSIMA; COLOR: BEL06 OLIVE LEAF; SIZE: BRICK 3"X6"; GROUT: TO BE SELECTED BY DESIGNER

TC2 VENDOR: BEDROSIANS; COLLECTION: BELLISSIMA; COLOR: BEL06 OLIVE LEAF; SIZE: 6"X6" WITH COVE PIECES; GROUT: TO BE SELECTED BY DESIGNER

TC3 VENDOR: BEDROSIANS; COLLECTION: BELLISSIMA; COLOR: BEL05 CHESTNUT; SIZE: A106 6" QUARTER ROUND/CNR

TC4 VENDOR: BEDROSIANS; COLLECTION: BELLISSIMA; COLOR: BEL04 LINEN SATIN; SIZE: BRICK 3"X6" WITH COVE PIECES; GROUT: TO BE SELECTED BY DESIGNER

TC5 VENDOR: CEPAC TILE; COLLECTION: LUMINOUS BOARDERS; COLOR: LUM–14 JADE

TILE (CERAMIC) CONTINUED:

TC6 VENDOR: CEPAC TILE; COLLECTION: LUMINOUS MOSAICS; COLOR: LIM–4 JADE

TC7 VENDOR: DAL TILE; COLLECTION: MATTE; COLOR: 0732 UPTOWN TAUPE(2); SIZE: 6"X6" WITH COVE PIECES; GROUT: TO BE SELECTED BY DESIGNER

TILE (GLASS):

TG1 NOT USED

TG2 VENDOR: G&G HOME SUPPLIES; COLLECTION: GLASS MOSAIC; COLOR: GSD846; SIZE: 12"X12

TG3 VENDOR: G&G HOME SUPPLIES; COLLECTION: GLASS MOSAIC; COLOR: GSD326; SIZE: 12"X12"

TILE (PORCELAIN):

TP1 VENDOR: DAL TILE; COLLECTION: CONCRETE; COLOR: CN94 EASTSIDE BROWN; SIZE: 20"X20"; GROUT: TO BE SELECTED BY DESIGNER

TP2 VENDOR: CROSSVILLE; COLLECTION: COLOR BLOX; COLOR: A1108 SEA OTTER; SIZE: 6"X6"

TP3 VENDOR: CROSSVILLE; COLLECTION: CROSS–COLORS; COLOR: A215 EMPRESS WHITE; SIZE: 2"X2"

TILE (PORCELAIN) CONTINUED:

TP4 VENDOR: CROSSVILLE; COLLECTION: CROSS–COLORS; COLOR: A215 EMPRESS WHITE; SIZA: 4"X4"

VINYL TILE:

VT VENDOR: MANNINGTON; COLOR: 343 CITRINE; SIZE: 12"X12"

WOOD:

W1 VENDOR: PLYBOO; STYLE: BB–0372PD; COLOR: PLYBOO STRAND DARK; SIZE: 3"

W2 VENDOR: PLYBOO PURE; STYLE: FL–3636PF–NAF; COLOR: PREFINISHED PLYBOO STRAND DARK

W3 VENDOR: ARCHITECTURAL SYSTEMS, INC.; COLLECTION: SCULPTURED; STYLE: MDF WPMAS001; SIZE: 4'X8' PANELS; FINISH: SEAL WITH CLEAR SATING LACQUER, 3 COAT, SAND LIGHTLY BETWEEN COAT, MATCHING SOLID MDF 4" BASE & END CAP.

W4 VENDOR: ARCHITECTURAL SYSTEMS, INC.; COLLECTION: TROPICAL VENEER; STYLE: BAMBOO RINGS WPTRP067

W5 VENDOR: PAPERSTONE; COLOR: OBSIDIAN

W6 VENDOR: PLYBOO STRAND; STYLE: BP–1872PD DARK; SIZE: 4MMx30"x72" SOLID

W7 VENDOR: PLYBOO STRAND; STYLE: DARK – STAIR TREADS AND RISERS; SIZE: 3/8" THICK

W8 VENDOR: PLYBOO HAVANNA STRAND 3–PLY; STYLE: BP–4872PD–NAF

KEY PLAN

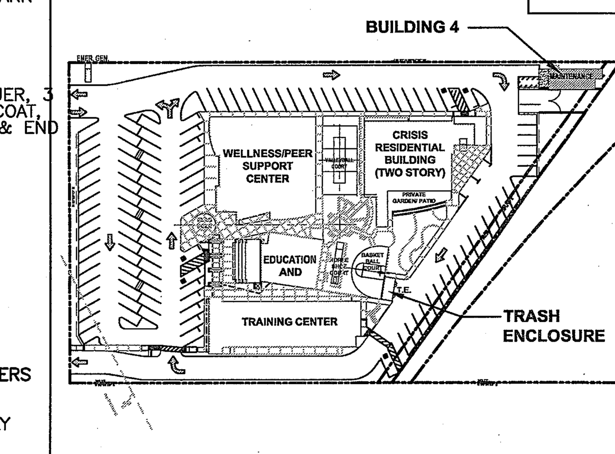

County of Orange
OC PUBLIC WORKS
Architecture & Engineering

Revisions: Sym. | Descrip. | Date | By
0742

Consultants — Drawn ___ Chkd. ___ Date ___

A-E Seal: LICENSED ARCHITECT ALLEN L. HIBBS NO. C10511 REN. 7/31/2011 STATE OF CALIFORNIA

A-E ALEXANDER + HIBBS, AIA, INC.
ALEXANDER + HIBBS, AIA, INC. Architecture and Planning, 1200 N. JEFFERSON ST. SUITE A, ANAHEIM, CALIFORNIA 92807, (714) 630-3686
Design DF Chkd. AH Date Nov. 26, 2009

Sht Title BUILDING 4 - SCHEDULES
Project COUNTY OF ORANGE HEALTH CARE AGENCY 401 SOUTH TUSTIN STREET
401 SOUTH TUSTIN STREET ORANGE, CA 92866
PROJ. NO. 100-042-P210-4200
Plan No. 52333-03608
Sheet A-6.4