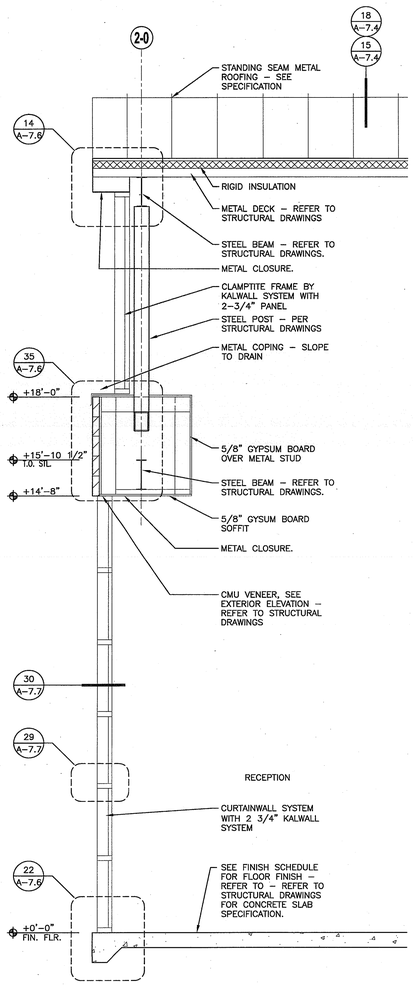

BUILDING 2 - WALL SECTION SCALE: 1/2"=1'-0" 4

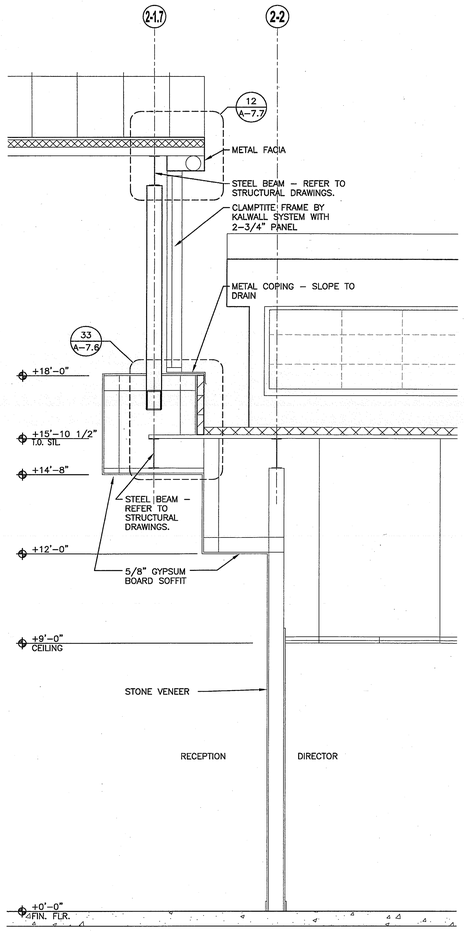

BUILDING 2 - WALL SECTION SCALE: 1/2"=1'-0" 3

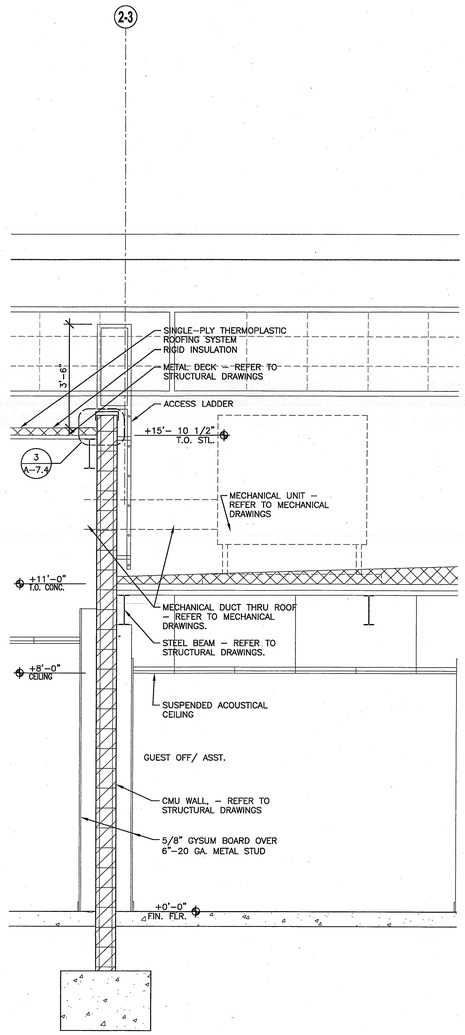

BUILDING 2 - WALL SECTION SCALE: 1/2"=1'-0" 2

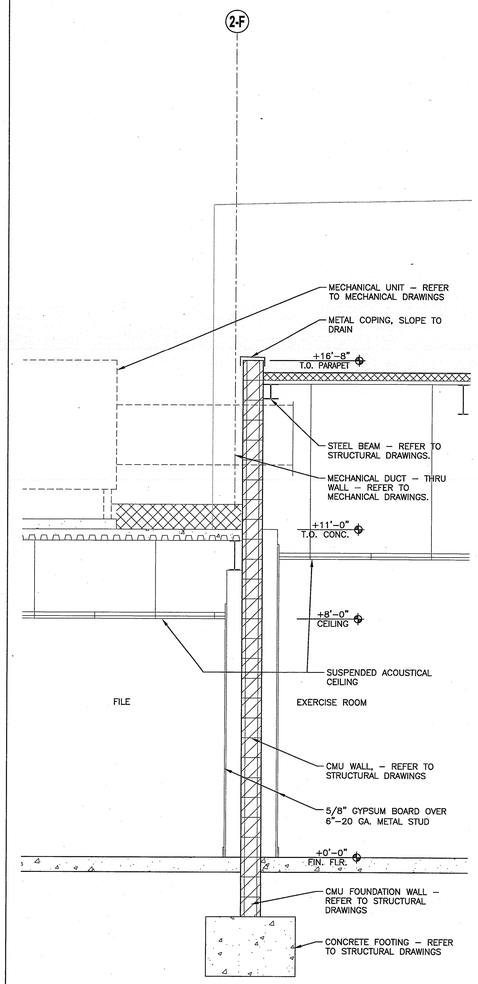

BUILDING 2 - WALL SECTION SCALE: 1/2"=1'-0" 1

KEY PLAN

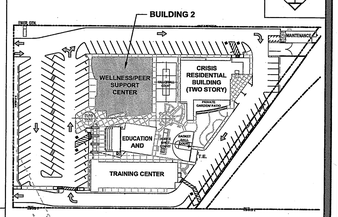

0742 COUNTY OF ORANGE HEALTH CARE AGENCY 401 SOUTH TUSTIN STREET

County of Orange
OC PUBLIC WORKS
Architecture & Engineering

Revisions			
Sym.	Descrip.	Date	By
0742			

Consultants

Drawn | Chkd. | Date

A-E Seal

A-E ALEXANDER + HIBBS, AIA, INC.

ALEXANDER + HIBBS, AIA, INC.
Architecture and Planning
1300 Quail Street, Suite 1
Newport Beach, 92660
(949) 476-2040

Design DF | Chkd. AH | Date Nov. 26, 2009

Sht Title BUILDING 2 - WALL SECTIONS

Project COUNTY OF ORANGE HEALTH CARE AGENCY
401 SOUTH TUSTIN STREET
401 SOUTH TUSTIN STREET
ORANGE, CA 92866

PROJ. NO. 100-042-P210-4200

Plan No.
52333-03608

Sheet
A-4.2.2