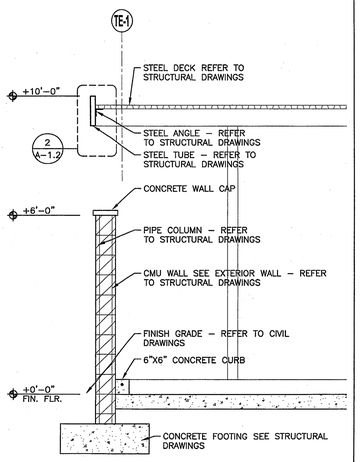

TRASH ENCLOSURE - WALL SECTION SCALE: 1/2"=1'-0" 9

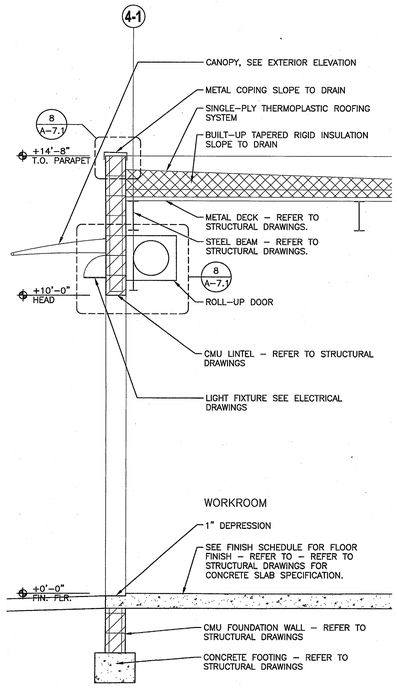

BUILDING 4 - WALL SECTION SCALE: 1/2"=1'-0" 7

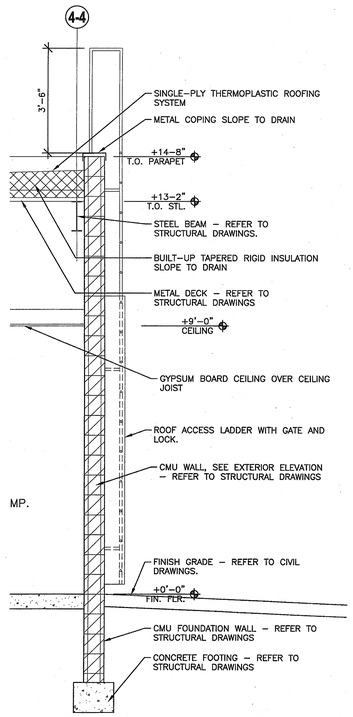

BUILDING 4 - WALL SECTION SCALE: 1/2"=1'-0" 5

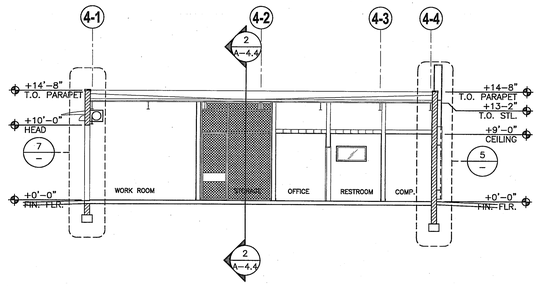

BUILDING 4 - BUILDING SECTION SCALE: 1/8"=1'-0" 1

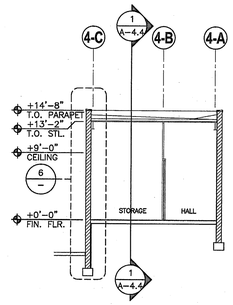

BUILDING 4 - BUILDING SECTION SCALE: 1/8"=1'-0" 2

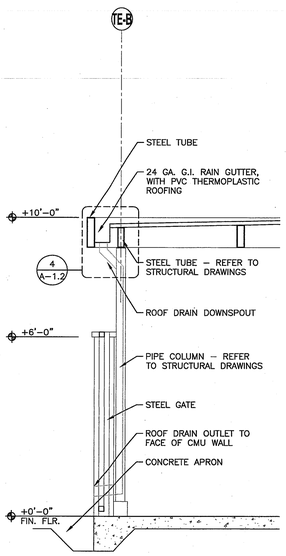

TRASH ENCLOSURE - WALL SECTION SCALE: 1/2"=1'-0" 10

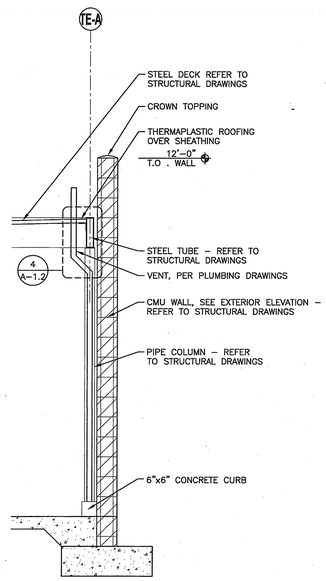

TRASH ENCLOSURE - WALL SECTION SCALE: 1/2"=1'-0" 8

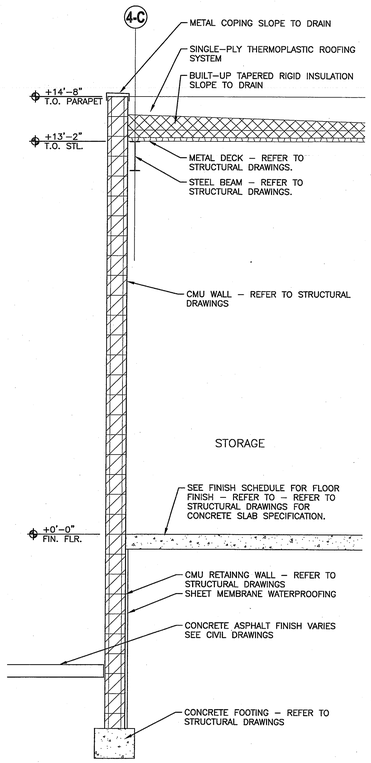

BUILDING 4 - WALL SECTION SCALE: 1/2"=1'-0" 6

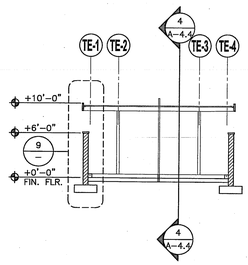

TRASH ENCLOSURE - BUILDING SECTION SCALE: 1/8"=1'-0" 3

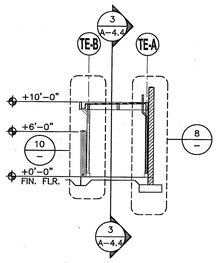

TRASH ENCLOSURE - BUILDING SECTION SCALE: 1/8"=1'-0" 4

KEY PLAN

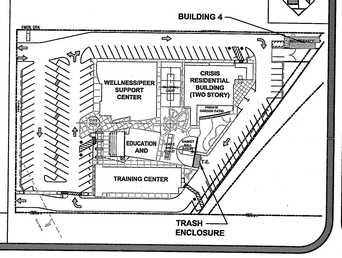

0742 COUNTY OF ORANGE HEALTH CARE AGENCY 401 SOUTH TUSTIN STREET

County of Orange
OC PUBLIC WORKS
Architecture & Engineering

Revisions

Sym.	Descrip.	Date	By

0742

Consultants

Drawn ___ Chkd. ___ Date ___

A-E Seal

REGISTERED ARCHITECT LEONARD T. HIBBS NO. C10511 REN. 12/31/2011 STATE OF CALIFORNIA

A-E ALEXANDER + HIBBS, AIA, INC.

ALEXANDER + HIBBS, AIA, INC. inc. Architecture and Planning 1300 N. Grinnell St. Suite A Orange, CA 92867 (714) 532-3488

Design DF Chkd. AH Date Nov. 26, 2009

Sht Title BUILDING 4 / TRASH ENCLOSURE - BUILDING AND WALL SECTIONS

Project COUNTY OF ORANGE HEALTH CARE AGENCY
401 SOUTH TUSTIN STREET
401 SOUTH TUSTIN STREET
ORANGE, CA 92866

PROJ. NO. 100-042-P210-4200

Plan No. 52333-03608

Sheet A-4.4