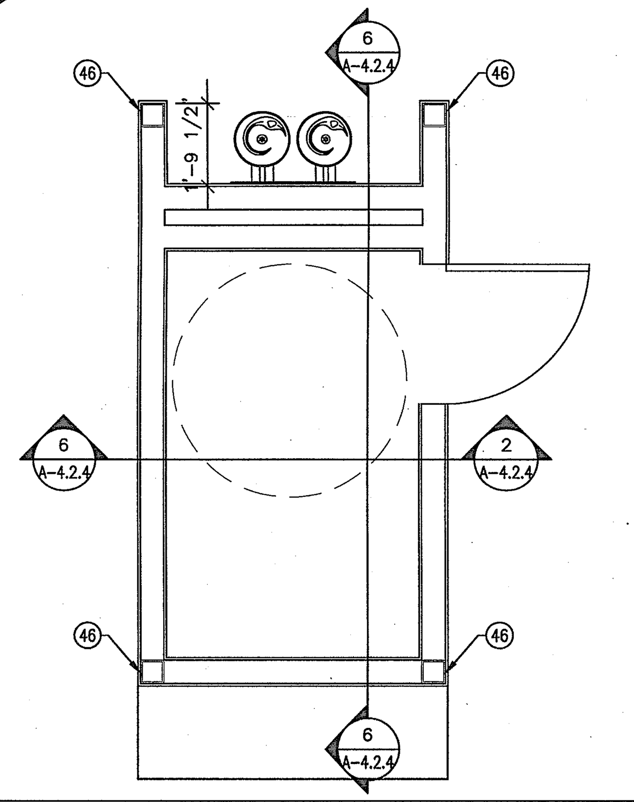

BUILDING 2 - RM. 2-127 | SCALE: 3/8"=1'-0" | 3

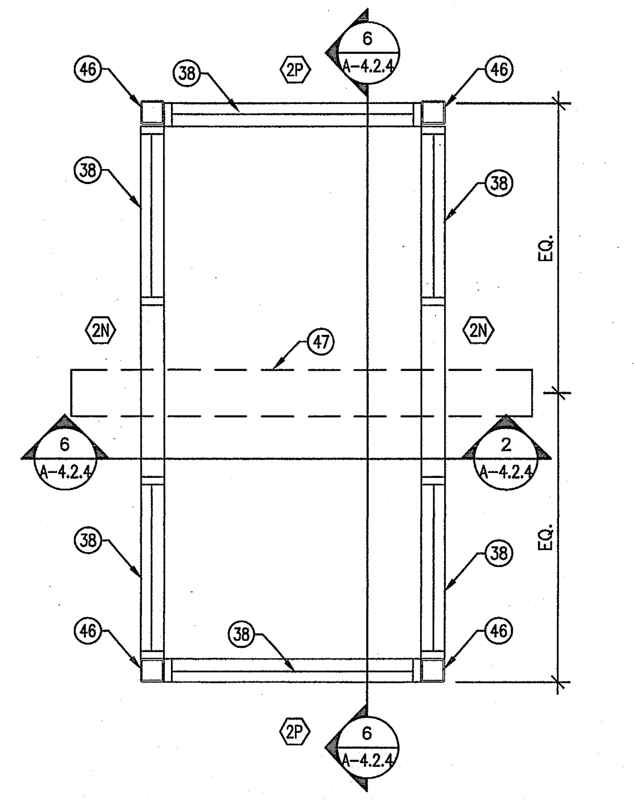

BUILDING 2 - RM. 2-127 @ '-0" A.F.F. | SCALE: 3/8"=1'-0" | 4

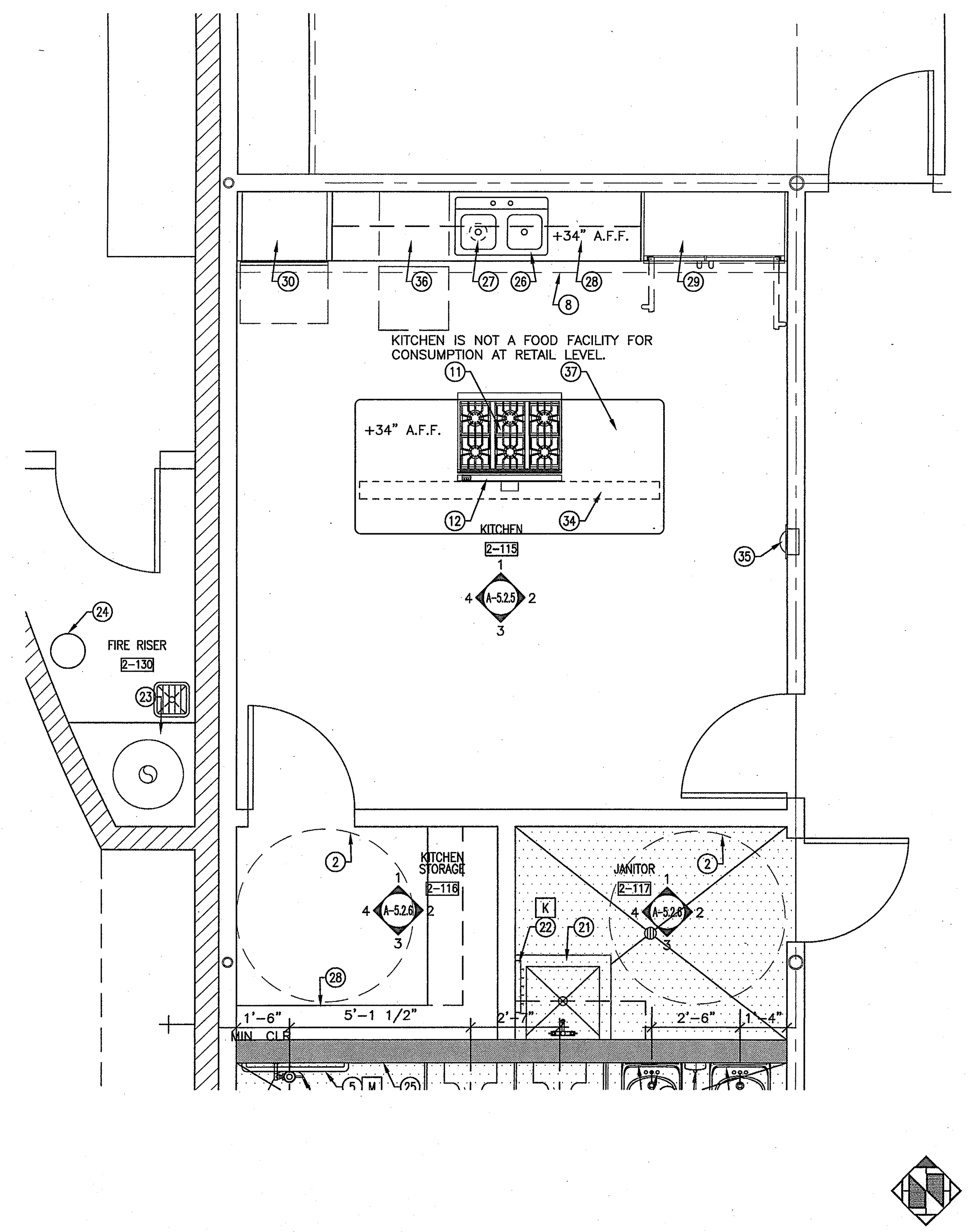

BUILDING 2 - ENLARGED KITCHEN PLAN | SCALE: 3/8"=1'-0" | 2

RESTROOM ACCESSORIES SCHEDULE

	EQUIPMENT TYPE	MANUF.	MODEL	MATERIAL/COLOR/FINISH	REMARKS
A	RECESSED TOILET PAPER, SEAT COVER & NAPKIN DISPOSAL	BOBRICK	B-3574	STAINLESS STEEL	–
B	PARTITION	–	–	–	SPEC. SECT. 10170
C	SURFACE MOUNTED TOILET PAPER DISPENSER	BOBRICK	B-2888	STAINLESS STEEL	–
D	SURFACE MOUNTED SEAT COVER DISPENSER	BOBRICK	B-221	STAINLESS STEEL	–
E	RECESSED TOILET PAPER & SEAT COVER DISPENSER	BOBRICK	B-3474	STAINLESS STEEL	–
F	URINAL SCREEN	–	–	–	–
G	RECESSED PAPER TOWEL DISPENSER & DISPOSAL	BOBRICK	B-369	STAINLESS STEEL	–
H	CLOTHES HOOK & BUMPER	BOBRICK	B-212	STAINLESS STEEL	–
J	SURFACE MOUNTED SOAP DISPENSER	BOBRICK	B-2111	STAINLESS STEEL	–
K	SHELF W/ MOP & BROOM HOLDERS & RAG HOOKS	BOBRICK	B-239X34	STAINLESS STEEL	–
L	MIRROR	BOBRICK	B-165 24X36	STAINLESS STEEL	–
M	GRAB BAR	BOBRICK	B-6806	STAINLESS STEEL	–
N	ROBE HOOK	GINGER	2810 SN	STAINLESS STEEL	–
P	TOILET PAPER HOLDER	GINGER	2809 SN	STAINLESS STEEL	–
Q	SHOWER CURTAIN	BOBRICK	B-204	WHITE VINYL	–
R	SHOWER ROD W/ HOOKS	BOBRICK	B-8047/204-1	STAINLESS STELL	–
S	TOWEL BAR	–	–	–	–
T	SURFACE MOUNTED PAPER TOWEL DISPENSER	BOBRICK	B-2621	STAINLESS STEEL	–
U	RECESSED TOILET PAPER, SEAT COVER, NAPKIN DISPOSAL	BOBRICK	B-357	STAINLESS STEEL	–
V	SANITRY NAPKIN/TAMPON VENDOR	BOBRICK	B-3500	STAINLESS STEEL	–
W	RECESSED PAPER TOWEL DISPENSER AND DISPOSAL	BOBRICK	B-3944	STAINLESS STEEL	–
X	SHOWER SEAT	BOBRICK	B-5191	–	–
Y	ROBE HOOK	BOBRICK	B-2116	STAINLESS STEEL	–

NOTE:
1. SEE PLUMBING DRAWINGS FOR FIXTURES NOT LISTED HERE
2. ACCESSIBLE CLOTHING HOOKS SHALL BE LOCATED NOT GREATER THAN 48" ABOVE THE FLOOR. (1117B.8)
3. CHANGING ROOM MIRROR SHALL NOT BE GREATER THAN 20" FROM THE FLOOR, 18" WIDE, MINIMUM 54" HIGH, AND MOUNTED TO ALLOW VIEWING FROM STANDING OR SITTING. (1117B.8)
4. SEE SPECIFICATION SECTION 10800 FOR RESTROOM ACCESSORIES.

RESTROOM ACCESSORIES | SCALE: 3/8"=1'-0" | 3

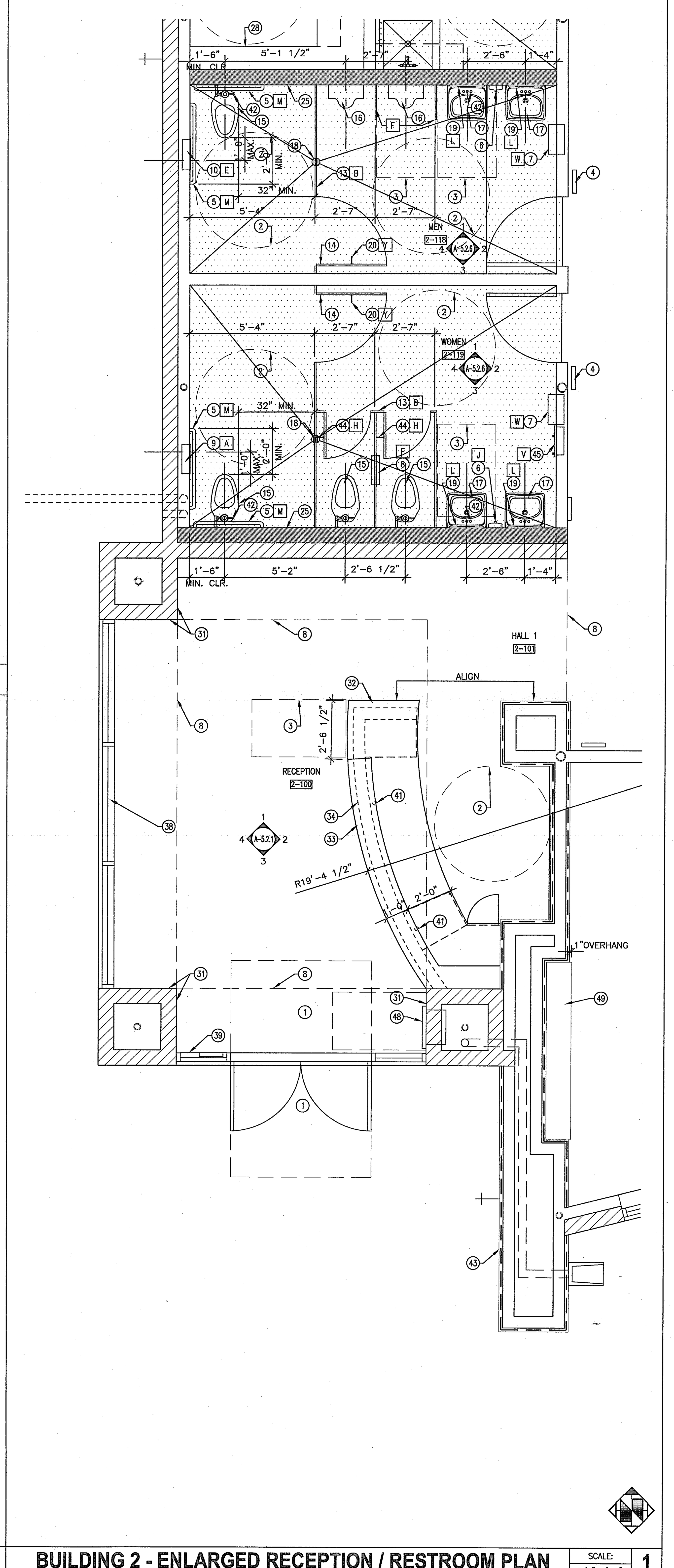

BUILDING 2 - ENLARGED RECEPTION / RESTROOM PLAN | SCALE: 3/8"=1'-0" | 1

LEGEND

DEPRESSED SLAB, REFER TO STRUCTURAL DRAWINGS.

EXTERIOR WALLS LEGEND:

- 8" CONCRETE MASONRY UNIT SOLID GROUT U.N.O.
- 8" CONCRETE MASONRY UNIT SOLID GROUT U.N.O. WITH 6" MTL. STUD FURRING, WITH R-19 BATT INSULATION, WITH 5/8" GYPSUM BOARD.
- STONE VENEER FINISH OVER CONCRETE MASONRY UNIT
- 6" FULL HEIGHT METAL STUD 16 GA. AT 16" O.C. WITH STONE VENEER OVER 5/8" DENSEGOLD EXTERIOR SHEATHING, WITH R-19 BATT INSULATION, 5/8" GYPSUM BOARD AT INTERIOR SIDE. FOR 1-HR USE 5/8" TYPE 'X' GYPSUM BOARD. (1-HR)
- 6" FULL HEIGHT METAL STUD 16 GA. WITH CMU VERNEER OVER 5/8" DENSEGOLD EXTERIOR SHEATHING, WITH R-19 BATT INSULATION, 5/8" GYPSUM BOARD AT INTERIOR SIDE.

INTERIOR WALL LEGEND:

- 1-HR INTERIOR OCCUPANCY SEPARATION 6"x20 GA. METAL STUD @ 16" O.C. WITH TYPE 'X' GYPSUM BOARD ON BOTH SIDES.
- 6" METAL STUD 20 GA. AT 16" O.C. WITH 5/8" GYPSUM BOARD BOTH SIDE. WATER RESISTANT GYPSUM BOARD AT WET LOCATION.
- 8" METAL STUD 20 GA. AT 16" O.C. PLUMBING WALL, 5/8" GYPSUM BOARD BOTH SIDE, WATER RISISTANT GYPSUM BOARD AT WET LOCATION.
- 6" FULL HEIGHT METAL STUD 20 GA. AT 16" O.C. WITH 5/8" TYPE 'X' TO UNDERSIDE OF DECK, WITH ACOUSTIBLOK AT ROOM 2-111, WITH 5/8" TYPE 'X' GYPSUM ON OTHER SIDE. ACOUSTICAL SEALANT AT TOP AND BOTTOM PLATE, SAFIN AT METAL DECK FOR SOUND INSULATION
- 6" LOW HEIGHT SCREEN WALL, WITH GLASS INSERT

NOTES:

1. FIRE BLOCK AT 10' INTERVALS BOTH HORIZONTAL AND VERTICAL AT STUD WALLS, ENCLOSED AND CONCEALED SPACES AND AT OPENINGS AROUND VENTS, PIPES, DUCTS, ETC. (708.2.1)
2. SEE TYPICAL FRAMING DETAILS 30/A-7.2
3. ALL INSULATION MATERIALS, INCLUDING THOSE COVERING PIPES AND TUBING AND INSULATION USED WITHIN FRAMING SHALL HAVE A FLAME-SPREAD RATING NOT TO EXCEED 25 AND A SMOKE DENSITY NOT TO EXCEED 450. (707.2 & 3)
4. PROVIDE 16 GA. STUDS @ ALL WALLS W/ CASEWORK AND @ ALL FRAMED OPENINGS.
5. PROVIDE WATER RESISTANT GYPSUM BOARD AT WET LOCATIONS.
6. SEE EXTERIOR ELEVATION FOR EXTERIOR FINISH.
7. PROVIDE ACOUSTIC INSULATION PER SPECIFICATION SECTION 07212, TYP. ALL WALLS.

KEYNOTES

1. PROVIDE LEVEL LANDING AT EXIT DOORS TYP. SEE DETAIL 10/A-0.4, 11/A-0.4, 18/A-0.4 AND 24/ A-.04.
2. ACCESSIBLE 5'-0" TURNING DIAMETER.
3. 30" x 48" CLEAR SPACE
4. ACCESSIBLE RESTROOM SIGNAGE LOCATION. SEE DETAIL 12 AND 13/A-0.5
5. 1 1/2" DIA. STAINLESS STEEL GRAB BAR – SEE DETAILS 19, 20 AND 21/A-7.5 FOR MOUNTING. SEE RESTROOM ACCESSORIES SCHEDULE.
6. SOAP DISPENSER SEE DETAIL 2/ A-0.5
7. RECESS MOUNTED PAPER TOWEL DISPENSER / WASTE RECEPTACLE SEE DETAIL 2, 9/ A-0.5. SEE RESTROOM ACCESSORIES SCHEDULE.
8. PARTITION MOUNTED TOILET PAPER DISPENSER, SEAT COVER DISPENSER AND NAPKIN DISPOSAL. SEE DETAIL 2, 9/ A-0.5. SEE RESTROOM ACCESSORIES SCHEDULE.
9. RECESS MOUNTED TOILET PAPER DISPENSER, SEAT COVER DISPENSER AND NAPKIN DISPOSAL. SEE DETAIL 2, 9/A-0.5. SEE RESTROOM ACCESSORIES SCHEDULE.
10. RECESS MOUNTED TOILET PAPER DISPENSER AND SEAT COVER DISPENSER. SEE DETAIL 2, 9/A-0.5. SEE RESTROOM ACCESSORIES SCHEDULE.
11. 36" WIDE GAS RANGE COOKTOP WITH ISLAND TRIM. SEE SPECIFICATIONS SECTION 11450.
12. 36" WIDE DOWNDRAFT VENTILATOR. SEE SPECIFICATION SECTION 11450.
13. TOILET PARTITION, SEE SPECIFICATION SECTION 10170.
14. TOILET PARTITION DOOR, SECTION 10170; FOR DISABILITY ACCESS SEE DETAIL 4/ A-0.5. SEE RESTROOM ACCESSORIES SCHEDULE. REFER TO SPECIFICATIONS SECTION 10800.
15. WATER CLOSETS (TOILETS) SHALL USE NO MORE THAN 1.6 GALLONS PER FLUSH (C.P.C. 913)– REFER TO PLUMBING DRAWINGS.
16. URINAL – SEE DETAIL 3/ A-0.5. – REFER TO PLUMBING DRAWINGS.
17. LAVATORY – SEE DETAIL 1/ A-0.5. – REFER TO PLUMBING DRAWINGS.
18. FLOOR DRAIN SEE PLUMBING DRAWINGS. DEPRESS 3/8" AND SLOPE FLOOR TO DRAIN. SLOPE TO BE 2% MAX.
19. MIRROR – SEE DETAIL 1/A-0.5. SEE RESTROOM ACCESSORIES SCHEDULE.
20. CLOTH HOOK – MOUNTED AT 48" PER ACCESSIBILITY.
21. MOP SINK – REFER TO PLUMBING DRAWINGS.
22. MOP AND BROOM HOLDER – SEE RESTROOM ACCESSORIES SCHEDULE.
23. WATER HEATER ON 6" CONCRETE PAD. REFER TO PLUMBING DRAWINGS. STRAP TO WALL AT 1/3 POINTS.
24. FIRE RISER LOCATION.
25. 8" STUD WALL
26. SINK – REFER TO PLUMBING DRAWINGS.
27. GARBAGE DISPOSAL – REFER TO PLUMBING AND ELECTRICAL DRAWINGS.
28. UPPER AND LOWER CASEWORK SEE INTERIOR ELEVATION – SEE DETAIL 31/A-7.2.
29. 48" WIDE BUILT-IN REFRIGERATOR/FREEZER, REFER TO SPECIFICATIONS SECTION 11450.
30. BUILT-IN MICROWAVE WITH TRIM KIT, OVER BUILT-IN ELECTRIC OVEN, SEE SPECIFICATION SECTION 11450.
31. EXPOSED CMU WALL AT RECEPTION.
32. RECEPTION DESK AT 30" A.F.F. – SEE DETAIL 19, 20/ A-7.2.
33. TRANSACTION COUNTER AT 42" A.F.F – SEE DETAIL 19, 20/ A-7.2.
34. LOW HEIGHT PARTITION. SEE DETAIL 11/ A-7.2.
35. FIRE EXTINGUISHER CABINET – SEE DETAIL 15/A-7.2
36. DOUBLE HEIGHT DISHWASHER DRAWERS. SEE SPECIFICATIONS SECTION 11450, – REFER TO PLUMBING DRAWINGS.
37. LOWER CASEWORK W/ PLASTIC LAMINATE FINISH; SOLID SURFACE COUNTERTOP SEE DETAIL 18/A-7.2.
38. ALUMINUM CURTAINWALL SYSTEM WITH 2 3/4" KALWALL SYSTEM.
39. ALUMINUM STOREFRONT SYSTEM.
40. STONE VENEER. SEE INTERIOR ELEVATION AND FINISH SCHEDULE.
41. GROMMET HOLE, COORDINATE IN FIELD.
42. CONTROL FOR WATER CLOSET AND LAVATORIES SHALL BE ON WIDE SIDE.
43. STONE VENEER SEE INTERIOR ELEVATION AND EXTERIOR ELEVATION.
44. CLOTH HOOK AND DOOR BUMPER.
45. SANITARY NAPKIN/TAMPON VENDOR, SEE DETAIL 2/A-05.
46. STEEL TUBE REFER TO STRUCTURAL DRAWINGS.
47. DUCTSOX – THRU CURTAINWALL SYSTEM, NO TRANSLUCENT PANELS AT PENETRATION.
48. CHECK IN KIOSK
49. COUNTERTOP SEE INTERIOR ELEVATIONS.

GENERAL NOTES:

A. ALL GLAZING IN HAZARDOUS LOCATIONS MUST BE IDENTIFIED BY A PERMANENT LABEL AS SAFETY GLAZING. HAZARDOUS GLAZING LOCATIONS INCLUDE; GLAZING IN ALL DOORS, GLAZING IN BATH AND SHOWER ENCLOSURES, ALL GLAZING WITHIN A 24" ARC OF A DOOR EDGE, PANELS OVER 9 SQUARE FEET HAVING THE LOWEST EDGE LESS THAN 18" ABOVE THE FINISHED FLOOR AND HAVING A TOP EDGE GREATER THAN 36" ABOVE THE FLOOR.

B. THE MEANS OF EGRESS SHALL BE ILLUMINATED WITH AT LEAST ONE-FOOT CANDLE AT THE FLOOR LEVEL SEE ELECTRICAL PLANS

C. ALL EXTERIOR RECEPTACLES AND THOSE INSTALLED IN BATHROOMS, KITCHEN COUNTER TOPS, AND WITHIN 6' FROM AN OUTSIDE EDGE OF A WET BAR SINK SHALL BE PROTECTED BY A GROUND FAULT CIRCUIT INTERRUPTER.

D. PROVIDE SMOKE DETECTORS IN HALLWAYS. DETECTORS ARE TO BE HARD WIRED WITH BATTERY BACK-UP.

E. NEW GLAZED WINDOW OPENINGS SHALL BE DUAL GLAZED AND LABELED WITH A CERTIFIED "U" VALUE OF 0.34 AND SHGC OF 0.28.

F. NEW GLAZED DOOR OPENINGS SHALL BE DUAL GLAZED AND LABELED WITH A CERTIFIED "U" VALUE OF 0.34.

G. ROOF COVERING SHALL BE CLASS "A" FIRE RETARDANT ASSEMBLY OR MATERIAL.

H. NEW TRANSLUCENT FENESTRATION SYSTEM PANEL: CRYSTAL/WHITE.
"U" VALUE NORTH WALL .29 AND
SOUTH/EAST AND WEST – .22
AND SHGC VALUE NORTH WALL .19
SOUTH/EAST AND WEST .10

I. ALL CABINETS/DOORS AND DRAWERS TO HAVE LOCKS PER SPECIFICATION SECTION

KEY PLAN

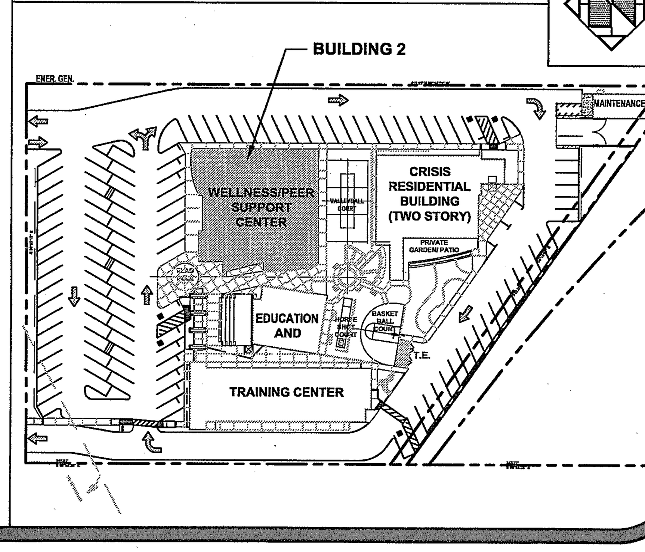

County of Orange
OC PUBLIC WORKS
Architecture & Engineering

Revisions | 0742 | Sym. | Descrip. | Date | By

Consultants | Drawn | Chkd. | Date

A-E Seal: LICENSED ARCHITECT, ALLEN L. HIBBS, NO. C10511, REN. 7/31/2011, STATE OF CALIFORNIA

A-E ALEXANDER + HIBBS, AIA, INC.
inc. ALEXANDER + HIBBS, AIA, INC. Architecture and Planning, 1200 N. JEFFERSON ST. SUITE A, ANAHEIM, CALIFORNIA 92807, (714) 630-3686

Design DF | Chkd. AH | Date Nov. 26, 2009

Sht Title BUILDING 2 - ENLARGED PLAN
Project COUNTY OF ORANGE HEALTH CARE AGENCY
401 SOUTH TUSTIN STREET
401 SOUTH TUSTIN STREET
ORANGE, CA 92866
PROJ. NO. 100-042-P210-4200

Plan No. 52333-03608

Sheet A-2.2.6