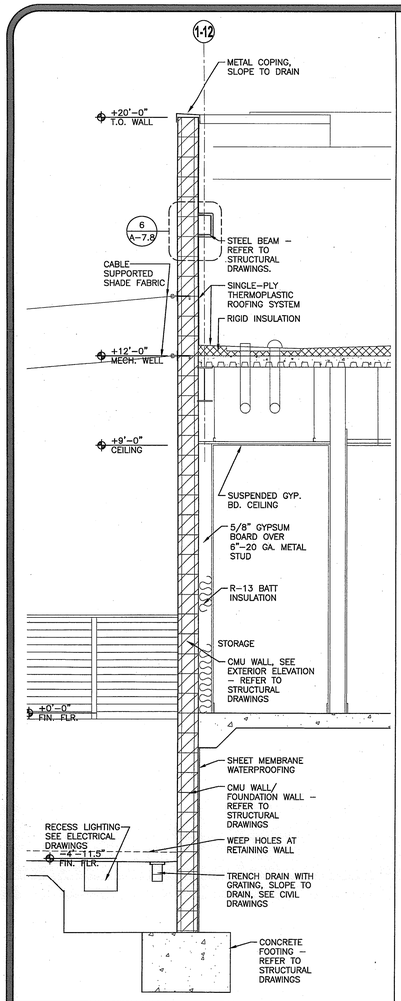

BUILDING 1 - PILASTER SECTION SCALE: 1/2"=1'-0" 5

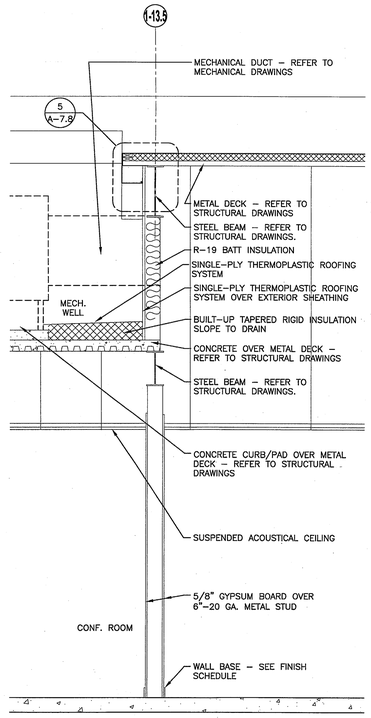

BUILDING 1 - WALL SECTION SCALE: 1/2"=1'-0" 4

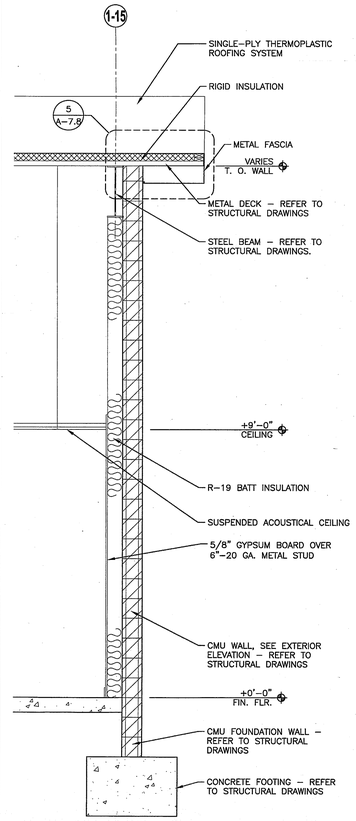

BUILDING 1 - WALL SECTION SCALE: 1/2"=1'-0" 3

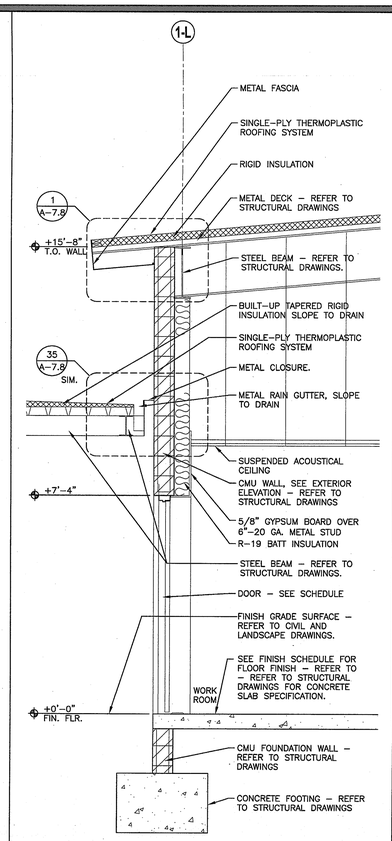

BUILDING 1 - WALL SECTION SCALE: 1/2"=1'-0" 2

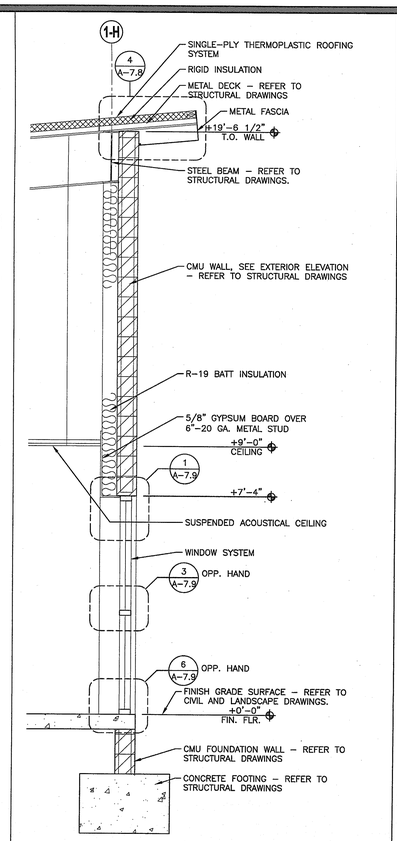

BUILDING 1 - WALL SECTION SCALE: 1/2"=1'-0" 1

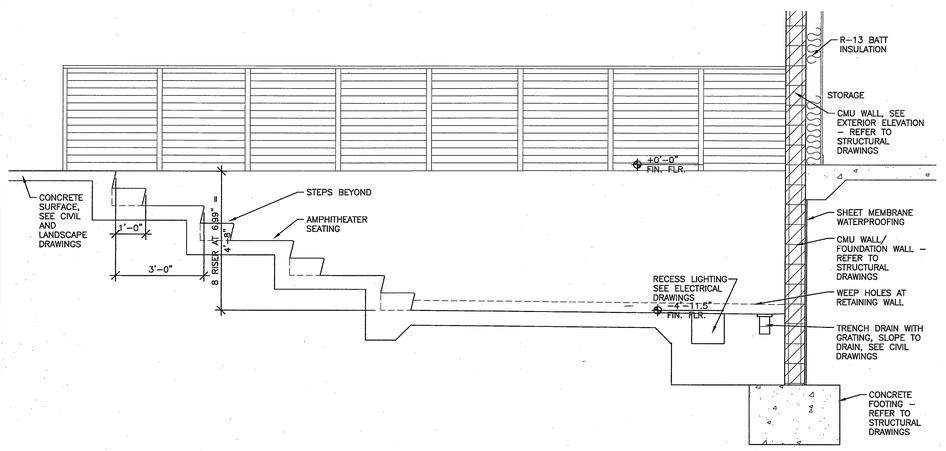

BUILDING 1 - AMPHITHEATER SECTION SCALE: 1/2"=1'-0" 8

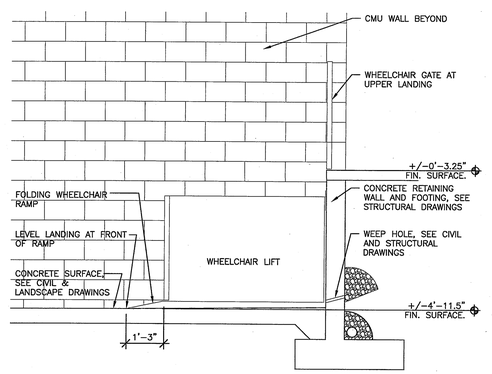

BUILDING 1 - WHEELCHAIR LIFT PIT SCALE: 1/2"=1'-0" 7

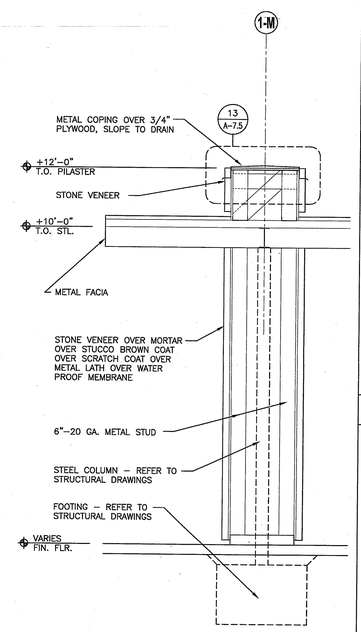

BUILDING 1 - PILASTER SECTION SCALE: 1/2"=1'-0" 6

KEY PLAN

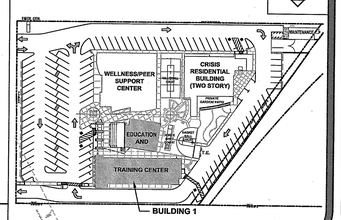

0742 COUNTY OF ORANGE HEALTH CARE AGENCY 401 SOUTH TUSTIN STREET

County of Orange
OC PUBLIC WORKS
Architecture & Engineering

Revisions

Sym.	Descrip.	Date	By

0742

Consultants

Drawn	Chkd.	Date

A-E Seal

A-E ALEXANDER + HIBBS, AIA, INC.

ALEXANDER + HIBBS, AIA, INC.
Architecture and Planning
1000 Quail Street, Suite 100
Newport Beach, 92660
(949) 476-2235

Design	Chkd.	Date
DF	AH	Nov. 26, 2009

Sht Title BUILDING 1 - WALL SECTIONS

Project COUNTY OF ORANGE HEALTH CARE AGENCY
401 SOUTH TUSTIN STREET
401 SOUTH TUSTIN STREET
ORANGE, CA 92866

PROJ. NO. 100-042-P210-4200

Plan No.
52333-03608

Sheet
A-4.1.4