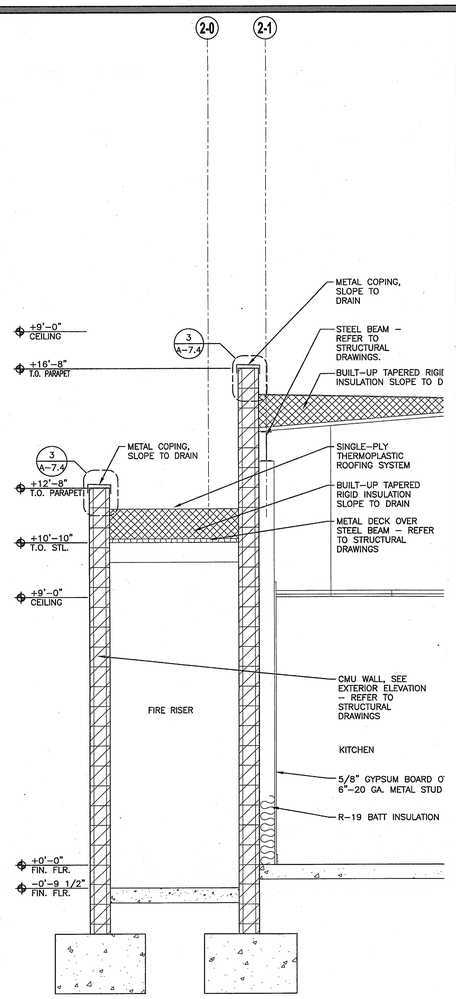

BUILDING 2 - WALL SECTION | SCALE: 1/2"=1'-0" | 4

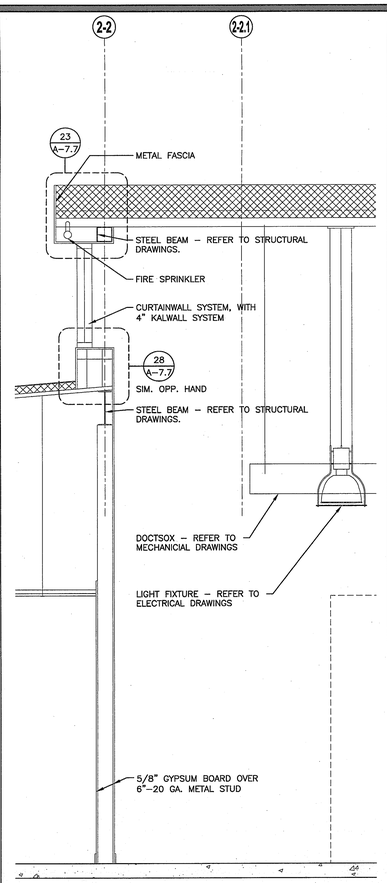

BUILDING 2 - WALL SECTION | SCALE: 1/2"=1'-0" | 3

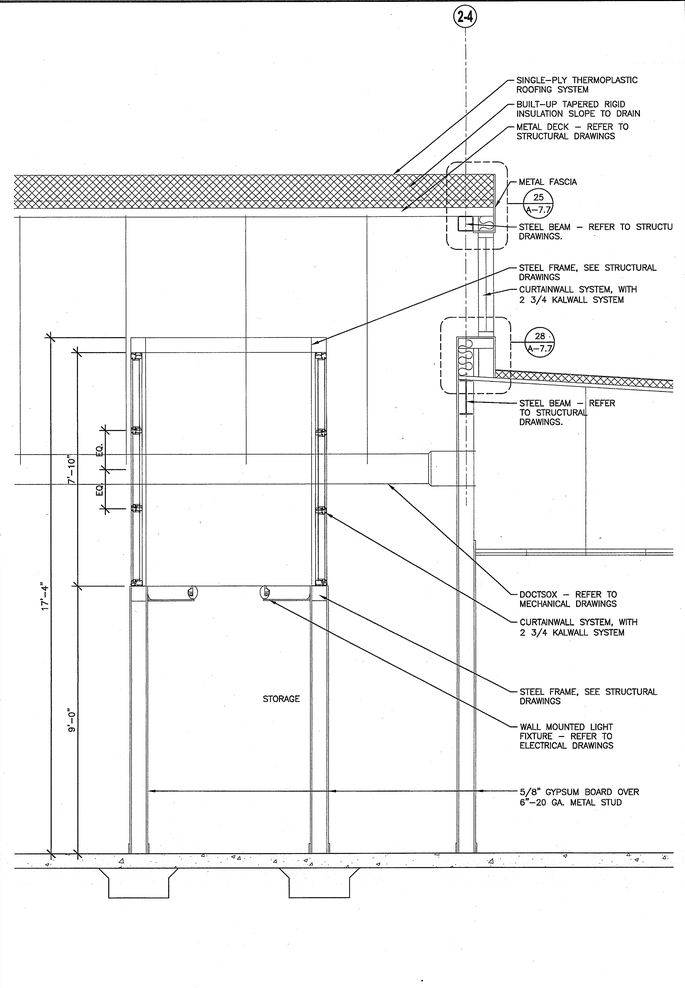

BUILDING 2 - WALL SECTION | SCALE: 1/2"=1'-0" | 2

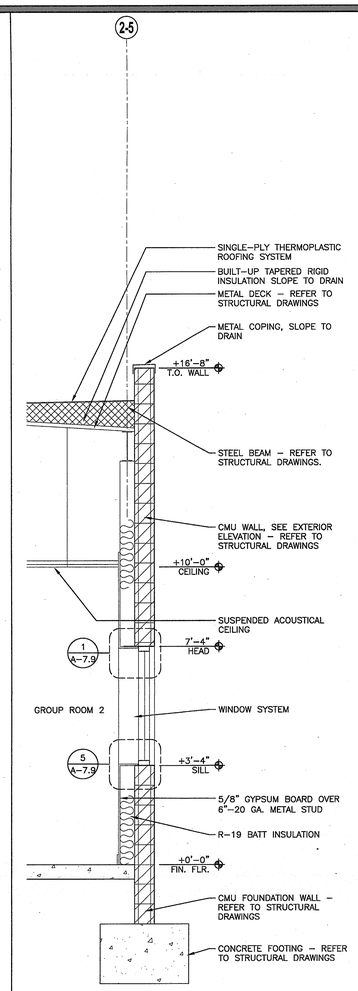

BUILDING 2 - WALL SECTION | SCALE: 1/2"=1'-0" | 1

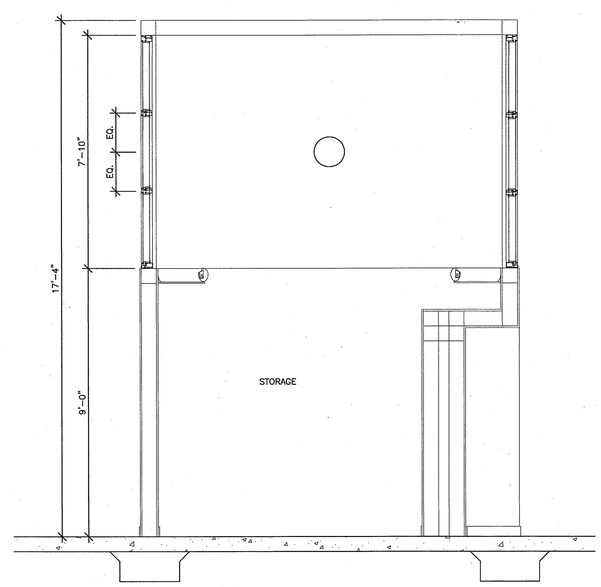

BUILDING 2 - STORAGE SECTION | SCALE: 1/2"=1'-0" | 6

KEY PLAN

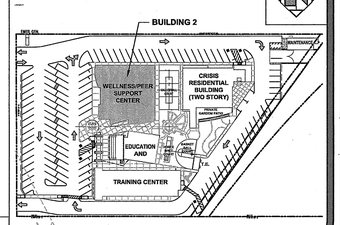

0742 COUNTY OF ORANGE HEALTH CARE AGENCY 401 SOUTH TUSTIN STREET

County of Orange
OC PUBLIC WORKS
Architecture & Engineering

Revisions

Sym.	Descrip.	Date	By
0742			

Consultants

Drawn.	Chkd.	Date

A-E Seal

LICENSED ARCHITECT – FIRM NO. C-21 REN. 12/31/2011 STATE OF CALIFORNIA

A-E ALEXANDER + HIBBS, AIA, INC.

ALEXANDER + HIBBS AIA INC
Architecture and Planning
1010 Jamboree Road
Newport Beach, CA 92660
(949) 476-2286 fax 476-9887

Design	Chkd.	Date
DF	AH	Nov. 26, 2009

Sht Title BUILDING 2 - WALL SECTIONS

Project COUNTY OF ORANGE HEALTH CARE AGENCY
401 SOUTH TUSTIN STREET

401 SOUTH TUSTIN STREET
ORANGE, CA 92866

PROJ. NO. 100-042-P210-4200

Plan No.
52333-03608

Sheet
A-4.2.4