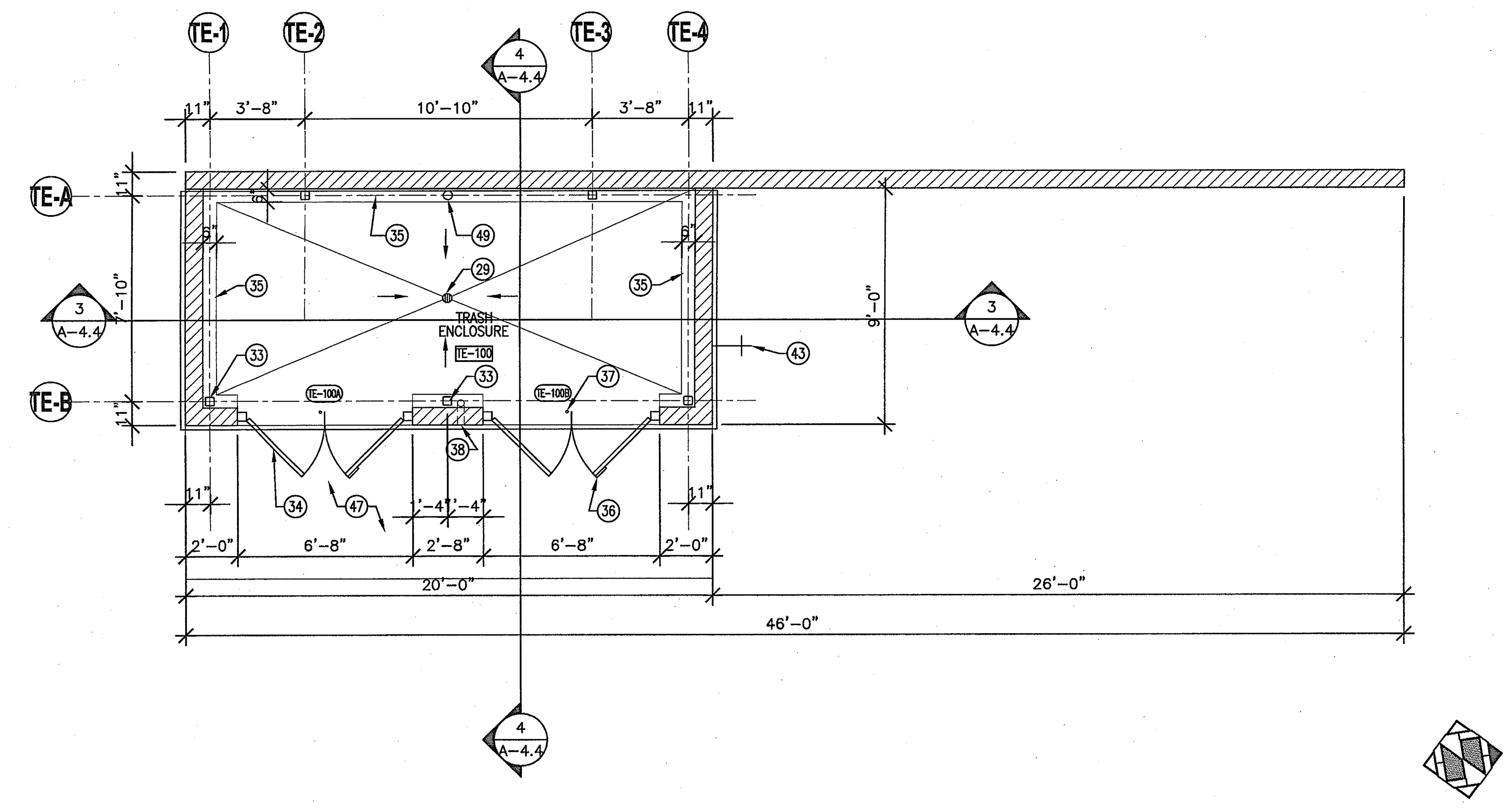

TRASH ENCLOSURE - FLOOR PLAN — SCALE: 1/4"=1'-0" — 4

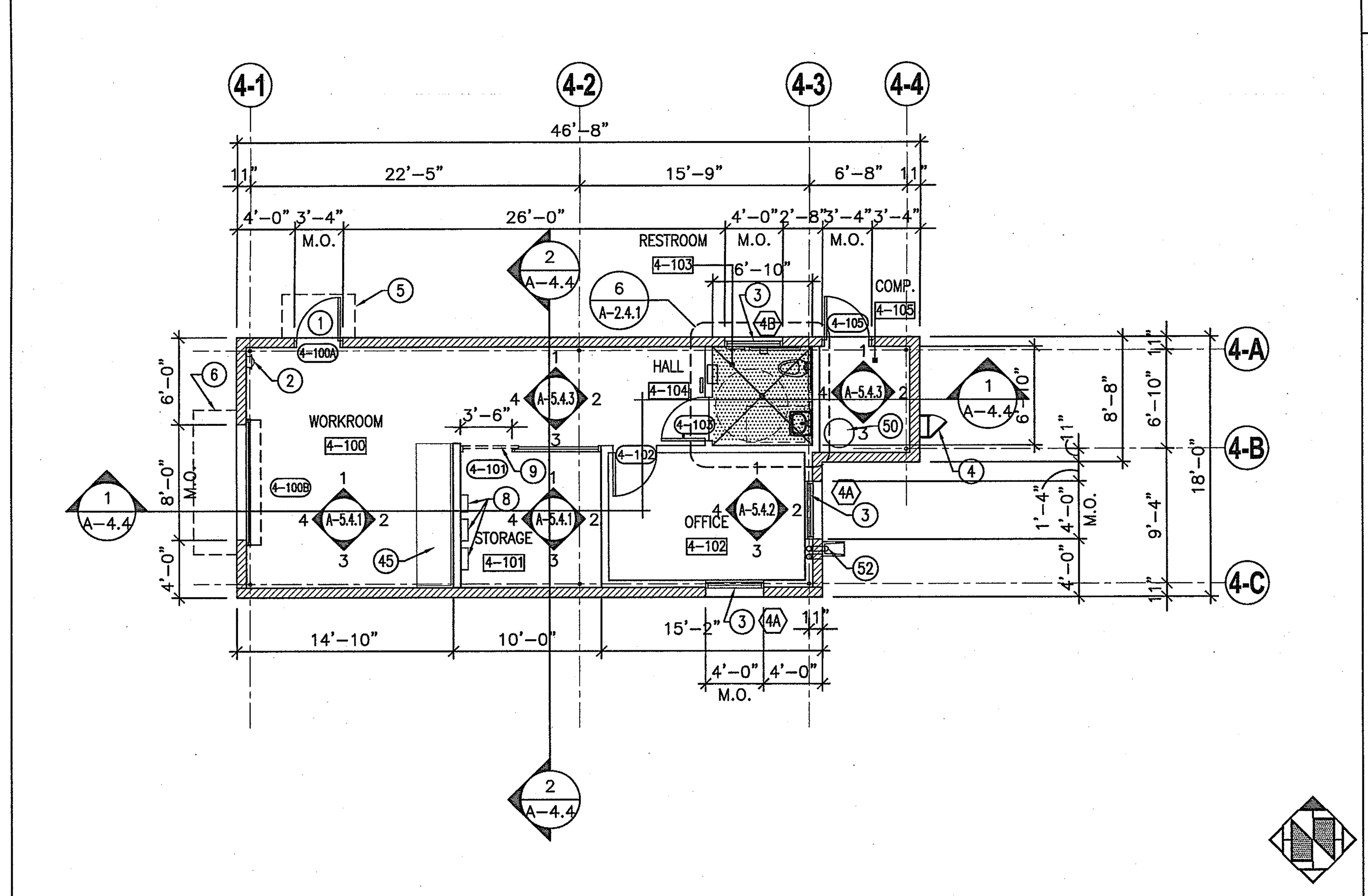

BUILDING 4 - FLOOR PLAN — SCALE: 1/8"=1'-0" — 1

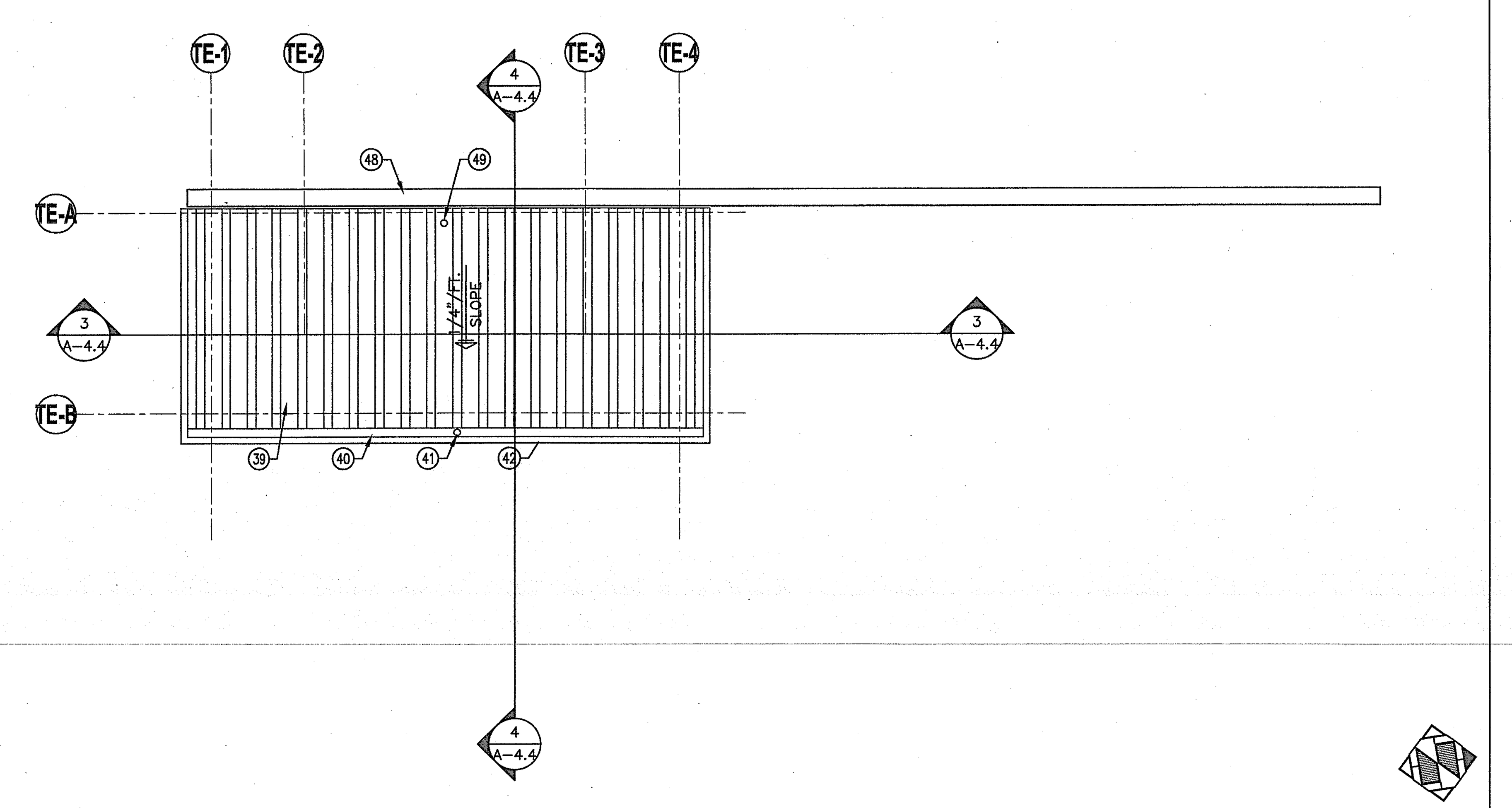

TRASH ENCLOSURE - ROOF PLAN — SCALE: 1/4"=1'-0" — 5

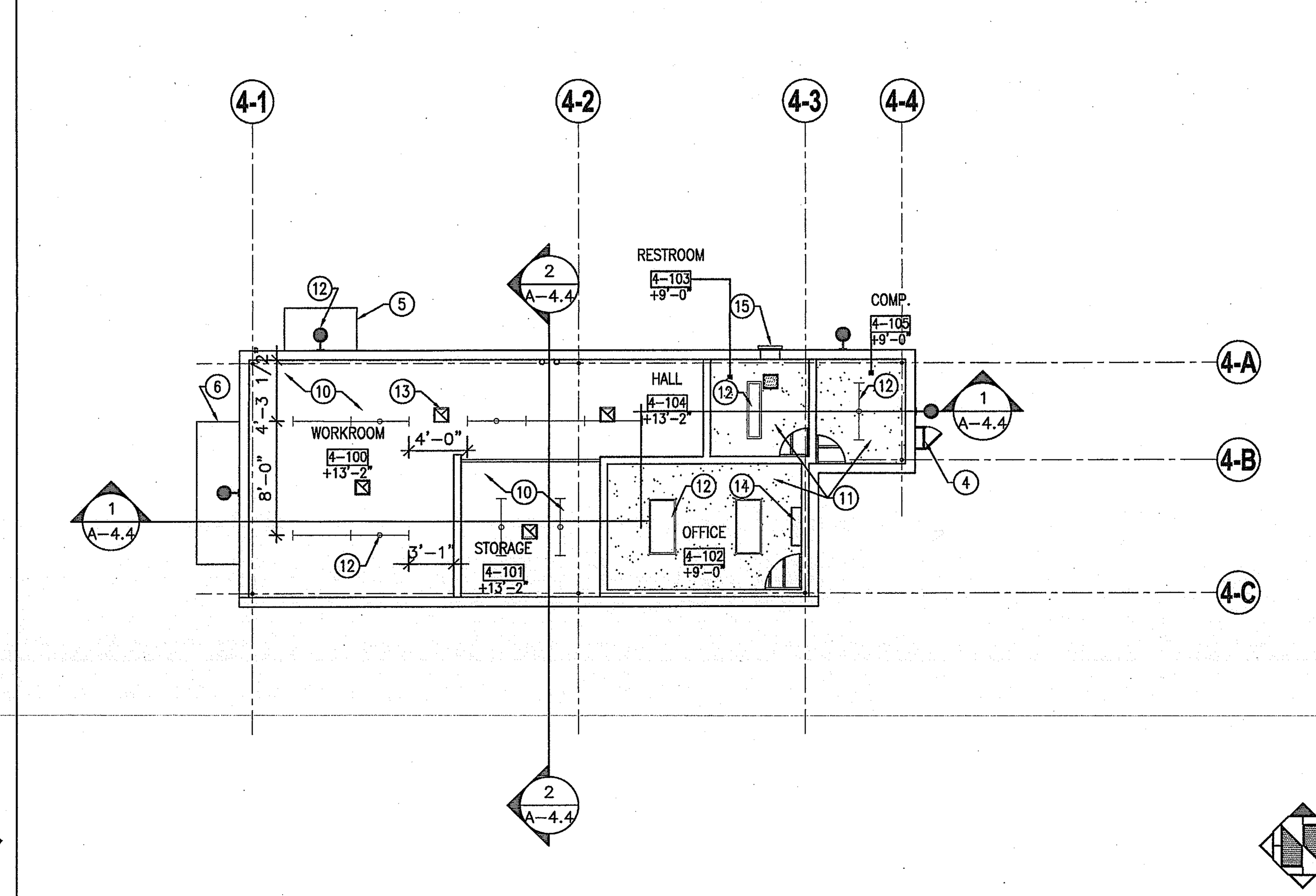

BUILDING 4 - REFLECTED CEILING PLAN — SCALE: 1/8"=1'-0" — 2

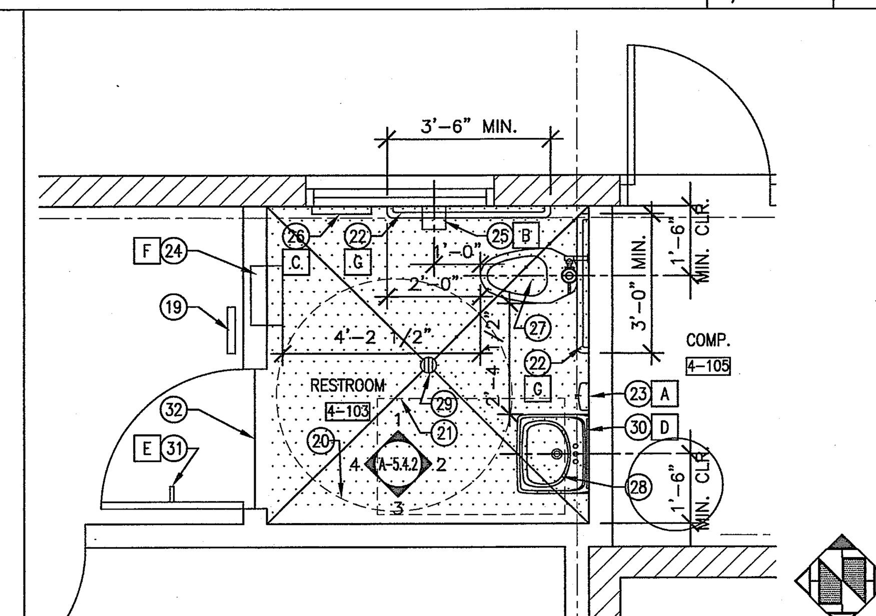

BUILDING 4 - ENLARGED RESTROOM PLAN — SCALE: 3/8"=1'-0" — 6

## RESTROOM ACCESSORIES SCHEDULE

| | EQUIPMENT TYPE | MANUF. | MODEL | MATERIAL/COLOR/FINISH | REMARKS |
|---|---|---|---|---|---|
| A | SURFACE MOUNTED SOAP DISPENSER | BOBRICK | B-2111 | STAINLESS STEEL | – |
| B | SURFACE MOUNTED TOILET PAPER | BOBRICK | B-2888 | STAINLESS STEEL | – |
| C | SURFACE MOUNTED SEAT COVER | BOBRICK | B-221 | STAINLESS STEEL | – |
| D | MIRROR | BOBRICK | B-290 24X36 | STAINLESS STEEL | – |
| E | CLOTHES HOOK | BOBRICK | B-6717 | STAINLESS STEEL | – |
| F | RECESSED PAPER TOWEL DISPENSER & DISPOSAL | BOBRICK | B-369 | STAINLESS STEEL | – |
| G | GRAB BAR | BOBRICK | B-6806 | STAINLESS STEEL | – |

NOTE:
1. SEE PLUMBING DRAWINGS FOR FIXTURES NOT LISTED HERE
2. ACCESSIBLE CLOTHING HOOKS SHALL BE LOCATED NOT GREATER THAN 48" ABOVE THE FLOOR. (1117B.8)
3. CHANGING ROOM MIRROR SHALL NOT BE GREATER THAN 20" FROM THE FLOOR, 18" WIDE, MINIMUM 54" HIGH, AND MOUNTED TO ALLOW VIEWING FROM STANDING OR SITTING. (1117B.8)
4. SEE SPECIFICATION SECTION 10800 FOR RESTROOM ACCESSORIES.

BUILDING 4 - RESTROOM ACCESSORIES — SCALE: — 7

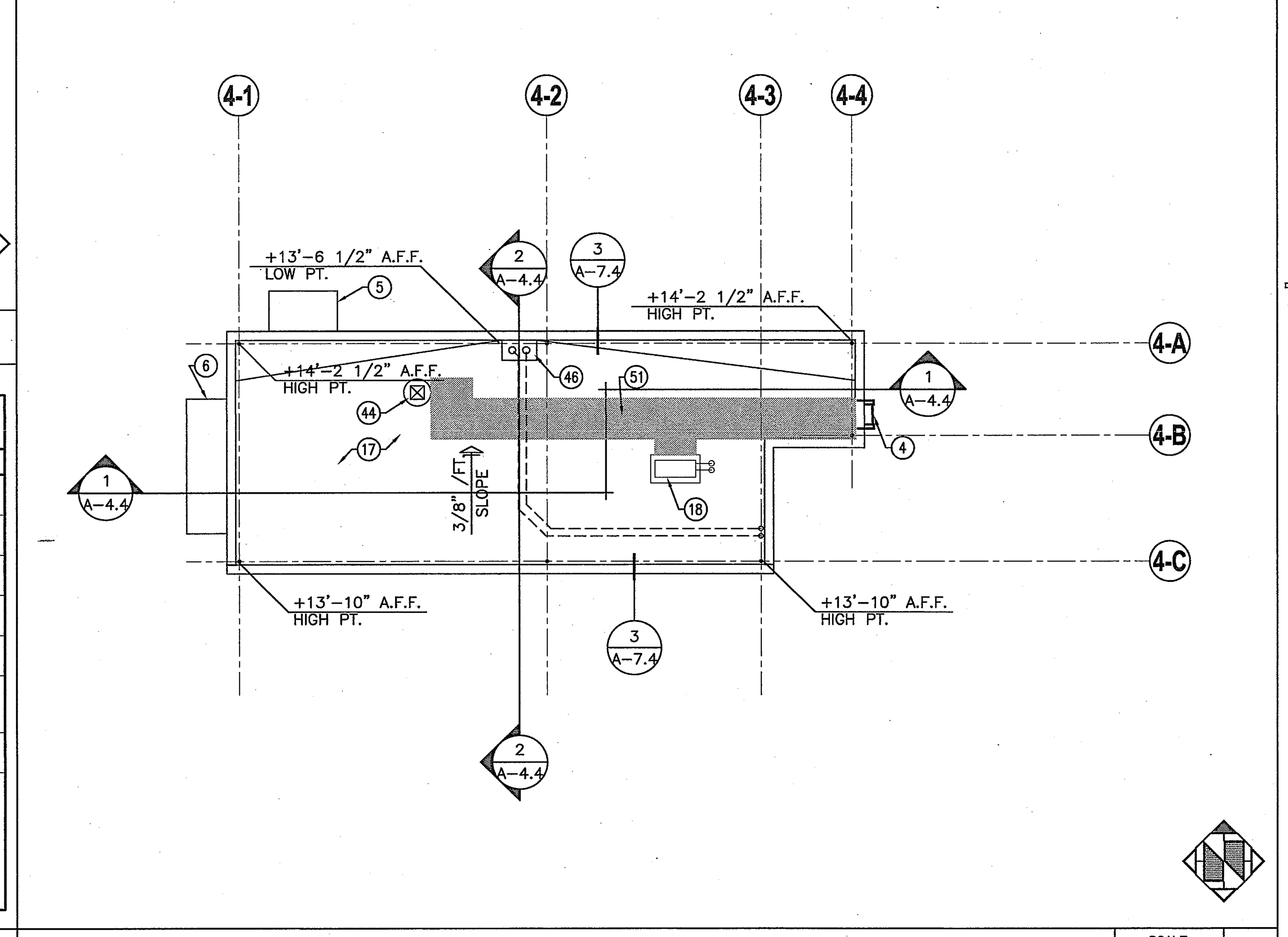

BUILDING 4 - ROOF PLAN — SCALE: 1/8"=1'-0" — 3

## LEGEND

DEPRESSED SLAB, REFER TO STRUCTURAL DRAWINGS.

EXTERIOR WALLS LEGEND:

8" CONCRETE MASONRY UNIT SOLID GROUT U.N.O.

8" CONCRETE MASONRY UNIT SOLID GROUT U.N.O. WITH 6" MTL. STUD FURRING, WITH R-19 BATT INSULATION, WITH 5/8" GYPSUM BOARD.

STONE VENEER FINISH OVER CONCRETE MASONRY UNIT

6" FULL HEIGHT METAL STUD 16 GA. AT 16" O.C. WITH STONE VENEER OVER 5/8" DENSEGOLD EXTERIOR SHEATHING, WITH R-19 BATT INSULATION, 5/8" GYPSUM BOARD AT INTERIOR SIDE. FOR 1-HR USE 5/8" TYPE 'X' GYPSUM BOARD. (1-HR)

6" FULL HEIGHT METAL STUD 16 GA. WITH CMU VERNEER OVER 5/8" DENSEGOLD EXTERIOR SHEATHING, WITH R-19 BATT INSULATION, 5/8" GYPSUM BOARD AT INTERIOR SIDE.

INTERIOR WALL LEGEND:

1-HR INTERIOR OCCUPANCY SEPARATION 6"x20 GA. METAL STUD @ 16" O.C. WITH TYPE 'X' GYPSUM BOARD ON BOTH SIDES.

6" METAL STUD 20 GA. AT 16" O.C. WITH 5/8" GYPSUM BOARD BOTH SIDE. WATER RESISTANT GYPSUM BOARD AT WET LOCATION.

8" METAL STUD 20 GA. AT 16" O.C. PLUMBING WALL, 5/8" GYPSUM BOARD BOTH SIDE, WATER RISISTANT GYPSUM BOARD AT WET LOCATION.

6" FULL HEIGHT METAL STUD 20 GA. AT 16" O.C. WITH 5/8" TYPE 'X' TO UNDERSIDE OF DECK, WITH ACOUSTIBLOK AT ROOM 2-111, WITH 5/8" TYPE 'X' GYPSUM ON OTHER SIDE. ACOUSTICAL SEALANT AT TOP AND BOTTOM PLATE, SAFIN AT METAL DECK FOR SOUND INSULATION

6" LOW HEIGHT SCREEN WALL, WITH GLASS INSERT

NOTES:

1. FIRE BLOCK AT 10' INTERVALS BOTH HORIZONTAL AND VERTICAL AT STUD WALLS, ENCLOSED AND CONCEALED SPACES AND AT OPENINGS AROUND VENTS, PIPES, DUCTS, ETC. (708.2.1)
2. SEE TYPICAL FRAMING DETAILS 30/A-7.2
3. ALL INSULATION MATERIALS, INCLUDING THOSE COVERING PIPES AND TUBING AND INSULATION USED WITHIN FRAMING SHALL HAVE A FLAME-SPREAD RATING NOT TO EXCEED 25 AND A SMOKE DENSITY NOT TO EXCEED 450. (707.2 & 3)
4. PROVIDE 16 GA. STUDS @ ALL WALLS W/ CASEWORK AND @ ALL FRAMED OPENINGS.
5. PROVIDE WATER RESISTANT GYPSUM BOARD AT WET LOCATIONS.
6. SEE EXTERIOR ELEVATION FOR EXTERIOR FINISH.
7. PROVIDE ACOUSTIC INSULATION PER SPECIFICATION SECTION 07212, TYP. ALL WALLS.

## CEILING LEGEND

NOTES:
1. FOR ALL LIGHT FIXTURES, REFER TO ELECTRICAL DRAWINGS
2. FOR ALL MECHANICAL COMPONENTS, REFER TO MECHANICAL DRAWINGS

- 2'-0" x 2'-0" SUSPENDED ACOUSTIC TILE CEILING SEE PLAN FOR HEIGHT SEE DETAILS 11, 12, 15,16 & 17 / A-7.3
- 5/8" GYPSUM BOARD CEILING OVER METAL FRAMING, SEE PLAN FOR HEIGHT SEE DETAILS 6 & 7 / A-7.3. U.N.O.
- EPIC CEILING OVER METAL FRAMING. SEE EXTERIOR ELEVATION FOR HEIGHT.
- WOOD CEILING OVER METAL FRAMING.
- +9'-0" CEILING HEIGHT (FROM TOP OF SLAB)
- RECESSED 2'x4' FLUORESCENT LIGHT FIXTURE SEE ELECTICAL DRAWINGS
- CONTINUOUS RECESSED FLUORESCENT LIGHT FIXTURE SEE ELECTICAL DRAWINGS
- SURFACED MOUNTED FLUORESCENT LIGHT FIXTURE. SEE ELECTRICAL DRAWINGS
- SURFACED MOUNTED STRIP FLUORESCENT LIGHT FIXTURE. SEE ELECTRICAL DRAWINGS
- SUSPENDED FLUORESCENT LIGHT FIXTURE. SEE ELECTRICAL DRAWINGS
- WALL MOUNTED FLUORESCENT LIGHT FIXTURE. SEE ELECTRICAL DRAWINGS
- SURFACE MOUNTED FLUORESCENT LIGHT FIXTURE. SEE ELECTRICAL DRAWINGS
- RECESSED CAN FLUORESCENT DOWN-LIGHT FIXTURE 6" ROUND. SEE ELECTRICAL DRAWINGS
- RECESSED CAN FLUORESCENT DOWN-LIGHT FIXTURE 4.5" ROUND. SEE ELECTRICAL DRAWINGS
- SUSPENDED LIGHT FIXTURE. SEE ELECTRICAL DRAWINGS
- WALL MOUNTED LIGHT FIXTURE. SEE ELECTRICAL DRAWINGS
- WALL MOUNTED LIGHT FIXTURE. SEE ELECTRICAL DRAWINGS
- RECESSED WALL WASHER – UP LIGHT FIXTURE. SEE ELECTRICAL DRAWINGS
- WALL MOUNTED FLUORESCENT LIGHT FIXTURE. SEE ELECTRICAL DRAWINGS
- (SP) SURFACE MOUNTED SPEAKER
- MECHANICAL SUPPLY AIR DIFFUSER SEE MECHANICAL DRAWINGS
- MECHANICAL RETURN AIR DIFFUSER SEE MECHANICAL DRAWINGS
- MECHANICAL EXHAUST FAN GRILL REFER TO MECHANICAL DRAWINGS
- MECHANICAL EXHAUST FAN CEILING MOUNTED – REFER TO MECHANICAL DRAWINGS
- MECHANICAL SUPPLY AIR DIFFUSER LINEAR SEE MECHANICAL DRAWINGS
- MECHANICAL SUPPLY AIR DUCTSOX – SEE MECHANICAL DRAWINGS

## KEYNOTES

1. PROVIDE LEVEL LANDING AT EXIT DOORS TYP. SEE DETAIL 10/A-0.4, 11/A-0.4, 18/A-0.4, AND 24/A-0.4
2. FIRE EXTINGUISHER CABINET SURFACE MOUNTED – SEE DETAIL 15/A-7.2 SIM.
3. HOLLOW METAL WINDOW FRAME.
4. ROOF LADDER WITH LOCKABLE GATE, SEE DETAIL 25/A-7.5 SIM. SEE SPECIFICATION SECTION 05500.
5. EDGE OF CANOPY. 1500 ARCH – BY FEENEY ARCHITECTURAL PRODUCT. (800)-888-2418. SEE SPECIFICATION SECTION 10536.
6. EDGE OF CANOPY. 2700 CURVE – BY FEENEY ARCHITECTURAL PRODUCT. (800)-888-2418. SEE SPECIFICATION SECTION 10536.
7. ROOF DRAIN AND OVER FLOW DRAIN PIPE TO DAYLIGHT.
8. ELECTRICAL PANEL – SEE ELECTRICAL DRAWINGS
9. ACORN WIRE AND IRON WORKS, INC. PRODUCT 130A WIRE MESH PARTITION WITH 3'-6" OPENING WITH LOCKABLE ROLLING GATE. PAINTED BLACK. SEE SPECIFICATION SECTION 10605.
10. EXPOSED STRUCTURE, PAINTED FINISH. SEE SCHEDULE FOR FINISH. REFER TO STRUCTURAL DRAWINGS.
11. GYPSUM BOARD CEILING OVER METAL FRAMING.
12. LIGHT FIXTURE – SEE CEILING LEGEND – REFER TO ELECTRICAL DRAWINGS.
13. CEILING REGISTERS – REFER TO MECHANICAL DRAWINGS.
14. WALL HUNG FAN COIL UNIT – REFER TO MECHANICAL DRAWINGS.
15. LOUVER EXHAUST VENT – SEE MECHANICAL DRAWINGS.
16. 8"x16" LOUVER FOR ATTIC VENTILATION. SEE EXTERIOR ELEVATION. SEE ATTIC VENTILATION DATA
17. SINGLE-PLY THERMOPLASTIC ROOFING SYSTEM, OVER 3" MIN. BUILT-UP TAPERED RIGID INSULATION, SLOPE TO DRAIN (3/8"/FT. MIN. IN ANY DIRECTION) OVER METAL DECK. SEE SPECIFICATION SECTION 07543.
18. CONDENSING UNIT ON CONCRETE PAD – SEE DETAIL 2/A-7.4 AND MECHANICAL DRAWINGS
19. ACCESSIBLE RESTROOM SIGNAGE LOCATION. SEE DETAIL 12 AND 13/ A-0.5.
20. ACCESSIBLE 5'-0" TURNING DIAMETER.
21. 30" x 48" CLEAR SPACE
22. 1 1/2" DIA. STAINLESS STEEL GRAB BAR – SEE DETAILS 19, 20 AND 21/ A-7.5 FOR MOUNTING.
23. SOAP DISPENSER SEE DETAIL 2/ A-0.5
24. RECESS MOUNTED PAPER TOWEL DISPENSER / WASTE RECEPTACLE SEE DETAIL 2/ A-0.5.
25. SURFACE MOUNTED TOILET PAPER DISPENSER. SEE DETAIL 9/ A-0.5 SIM.
26. SEAT COVER DISPENSER. SEE DETAIL 5/ A-0.5.
27. WATER CLOSETS (TOILETS) SHALL USE NO MORE THAN 1.6 GALLONS PER FLUSH (C.P.C. 913)- REFER TO PLUMBING DRAWINGS.
28. LAVATORY – SEE DETAIL 1/ A-0.5. – REFER TO PLUMBING DRAWINGS.
29. FLOOR DRAIN, – REFER TO PLUMBING DRAWINGS.
30. MIRROR – SEE DETAIL 1/A-0.5.
31. CLOTH HOOK – MOUNTED AT 48" PER ACCESSIBILITY.
32. TRANSITION STRIP – SEE DOOR SCHEDULE AND FINISH PLAN,
33. STEEL COLUMN WITH EPOXY PAINT FINISH, REFER TO STRUCTURAL DRAWINGS.
34. STEEL GATE, WITH EPOXY PAINT FINISH: SEE EXTERIOR ELEVATION.
35. 6" CONCRETE CURB.
36. BARREL BOLT.
37. HOLE FOR CANE BOLT, TYP. AT 2 LOCATION.
38. ROOF DRAIN TO DAYLIGHT.
39. STEEL DECK SLOPE TO DRAIN. UNDERSIDE OF DECK PAINTED TO MATCH STRUCTURE.
40. G.I. RAIN GUTTER, PAINTED TO MATCH STRUCTURE.
41. DRAIN LEADER LOCATION.
42. STEEL TUBE. – REFER TO STRUCTURAL DRAWINGS.
43. RECESSED HOSE BIB, SEE DETAIL 13/A-7.4.
44. EXHAUST FAN, SEE MECHANICAL DRAWINGS.
45. 30" DEEP WORK BENCH WITH 2" BUTCHER BLOCK TOP – SEE INTERIOR ELEVATIONS – SEE DETAIL 32/A-7.2 SIM.
46. ROOF AND OVERFLOW DRAIN – SEE DETAIL 7/A-7.4. – REFER TO PLUMBING DRAWINGS
47. CONCRETE APRON – SEE CIVIL DRAWINGS.
48. 1" HIGH CROWN TOPPING.
49. VENT PIPE, AT ROOF PENETRATION SEE DETAIL 1/A-7.4 SIM. – REFER TO PLUMBING DRAWINGS.
50. COMPRESSOR, SEE PLUMBING DRAWINGS.
51. 3'-0" WIDE MIN. THERMOPLASTIC WALKING SURFACE. SEE SPECIFICATION SECTION 07543. (SHADED)
52. ROOF AND OVERFLOW DRAIN TO DAYLIGHT, WITH CONCRETE SPLASHBLOCK. – REFER TO PLUMBING DRAWINGS

GENERAL NOTES:

A. ALL GLAZING IN HAZARDOUS LOCATIONS MUST BE IDENTIFIED BY A PERMANENT LABEL AS SAFETY GLAZING. HAZARDOUS GLAZING LOCATIONS INCLUDE; GLAZING IN ALL DOORS, GLAZING IN BATH AND SHOWER ENCLOSURES, ALL GLAZING WITHIN A 24" ARC OF A DOOR EDGE, PANELS OVER 9 SQUARE FEET HAVING THE LOWEST EDGE LESS THAN 18" ABOVE THE FINISHED FLOOR AND HAVING A TOP EDGE GREATER THAN 36" ABOVE THE FLOOR.
B. THE MEANS OF EGRESS SHALL BE ILLUMINATED WITH AT LEAST ONE-FOOT CANDLE AT THE FLOOR LEVEL SEE ELECTRICAL PLANS
C. ALL EXTERIOR RECEPTACLES AND THOSE INSTALLED IN BATHROOMS, GARAGES, KITCHEN COUNTER TOPS, AND WITHIN 6' FROM AN OUTSIDE EDGE OF A WET BAR SINK SHALL BE PROTECTED BY A GROUND FAULT CIRCUIT INTERRUPTER.
D. PROVIDE SMOKE DETECTORS IN HALLWAYS. DETECTORS ARE TO BE HARD WIRED WITH BATTERY BACK-UP.
E. NEW GLAZED WINDOW OPENINGS SHALL BE DUAL GLAZED AND LABELED WITH A CERTIFIED "U" VALUE OF 0.34 AND SHGC OF 0.28.
F. NEW GLAZED DOOR OPENINGS SHALL BE DUAL GLAZED AND LABELED WITH A CERTIFIED "U" VALUE OF 0.34.
G. ROOF COVERING SHALL BE CLASS "A" FIRE RETARDANT ASSEMBLY OR MATERIAL.
H. NEW TRANSLUCENT FENESTRATION SYSTEM PANEL: CRYSTAL/WHITE. "U" VALUE NORTH WALL .29 AND SOUTH/EAST AND WEST – .22 AND SHGC VALUE NORTH WALL .19 SOUTH/EAST AND WEST .10
I. ALL CABINETS/DOORS AND DRAWERS TO HAVE LOCKS PER SPECIFICATION SECTION

## KEY PLAN

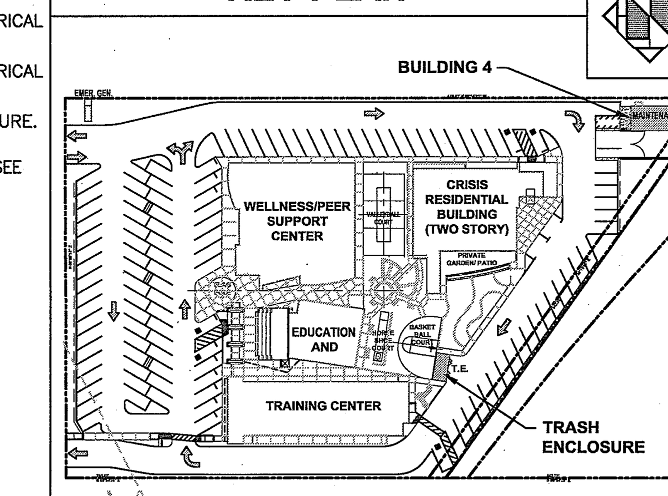


County of Orange
OC PUBLIC WORKS
Architecture & Engineering

Revisions — 0742 — Sym. | Descrip. | Date | By

Consultants — Drawn___ Chkd.___ Date___

A-E Seal

A-E ALEXANDER + HIBBS, AIA, INC.
ALEXANDER + HIBBS, AIA, INC. Architecture and Planning 1200 N. JEFFERSON ST. SUITE A ANAHEIM, CALIFORNIA 92807 (714) 630-3686
Date Nov. 26, 2009 — Chkd. AH — Design DF

Sht Title BUILDING 4 AND TRASH ENCLOSURE PLANS
Project COUNTY OF ORANGE HEALTH CARE AGENCY 401 SOUTH TUSTIN STREET
401 SOUTH TUSTIN STREET ORANGE, CA 92866
PROJ. NO. 100-042-P210-4200

Plan No. 52333-03608

Sheet A-2.4.1