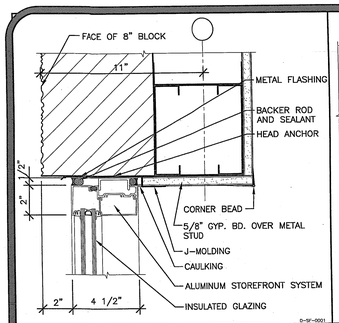

STOREFRONT HEAD @ CMU WALL — SCALE: 3"=1'-0" — 1

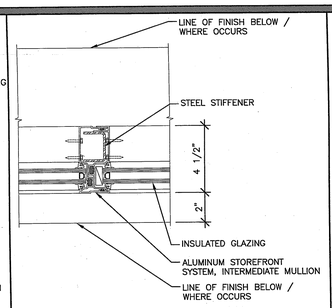

STOREFRONT INTER. VERT. — SCALE: 3"=1'-0" — 2

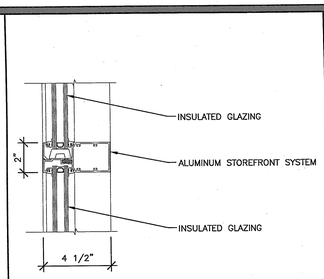

STOREFRONT INTER. HORIZ. — SCALE: 3"=1'-0" — 3

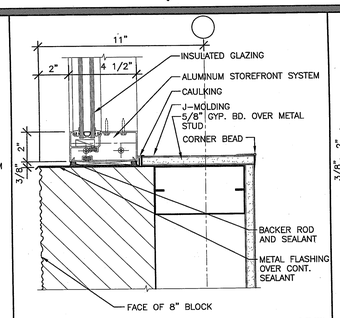

STOREFRONT JAMB @ CMU WALL — SCALE: 3"=1'-0" — 4

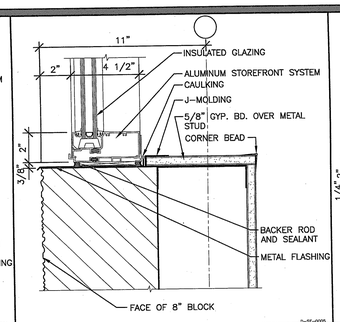

STOREFRONT SILL @ CMU WALL — SCALE: 3"=1'-0" — 5

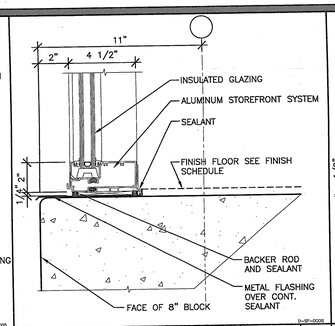

STOREFRONT SILL @ CONCRETE — SCALE: 3"=1'-0" — 6

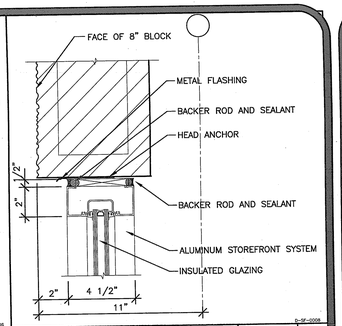

TRANSOM HEAD — SCALE: 3"=1'-0" — 7

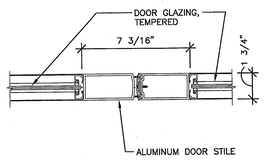

DOOR MEETING STILE — SCALE: 3"=1'-0" — 9

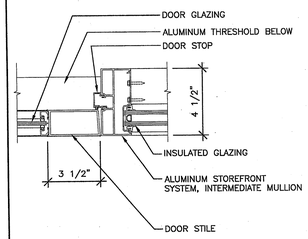

DOOR JAMB — SCALE: 3"=1'-0" — 10

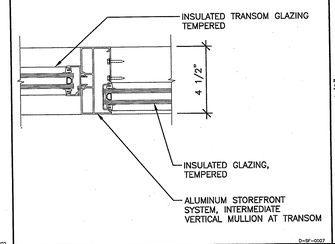

TRANSOM JAMB — SCALE: 3"=1'-0" — 11

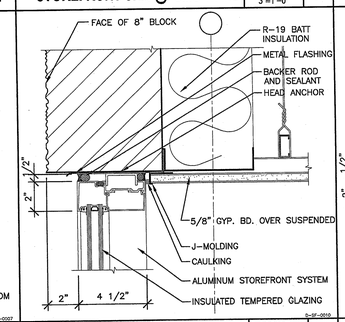

STOREFRONT HEAD — SCALE: 3"=1'-0" — 12

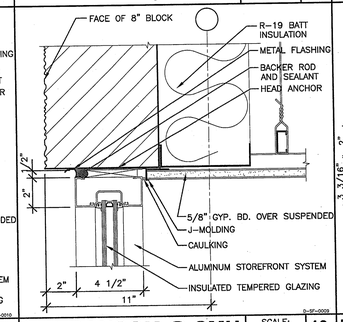

TRANSOM @ CMU — SCALE: 3"=1'-0" — 13

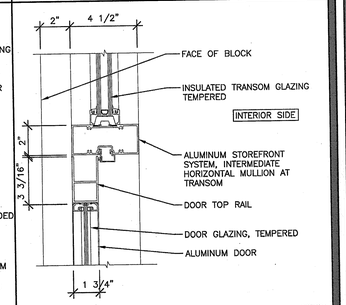

DOOR HEAD/TRANSOM SILL — SCALE: 3"=1'-0" — 14

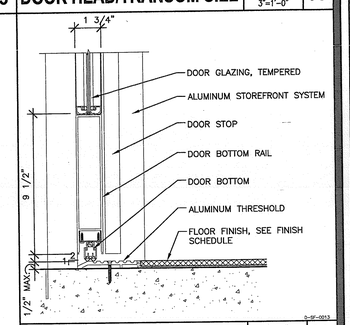

DOOR BOTTOM — SCALE: 3"=1'-0" — 21

County of Orange
OC PUBLIC WORKS
Architecture & Engineering

Revisions				
0742	Sym.	Descrip.	Date	By

Consultants

Drawn.	Chkd.	Date

A-E Seal

LICENSED ARCHITECT — NO. C16351 — REN. 12/31/2011 — STATE OF CALIFORNIA

A-E ALEXANDER + HIBBS, AIA, INC.

ALEXANDER + HIBBS / DAI INC
ARCHITECTURE AND PLANNING
1300 N. GRIFFITH, SUITE A
SANTA ANA, CALIFORNIA 92707
(714) 541-3966

Design	Chkd.	Date
DA	AH	Nov. 26, 2009

Sht Title DETAILS

Project COUNTY OF ORANGE HEALTH CARE AGENCY
401 SOUTH TUSTIN STREET
401 SOUTH TUSTIN STREET
ORANGE, CA 92866

PROJ. NO. 100-042-P210-4200

Plan No. 52333-03608

Sheet A-7.9

0742 COUNTY OF ORANGE HEALTH CARE AGENCY 401 SOUTH TUSTIN STREET