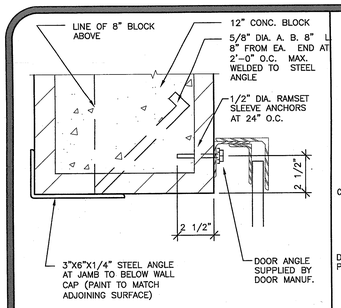

ROLL-UP DOOR JAMB SCALE: 3"=1'-0" 1

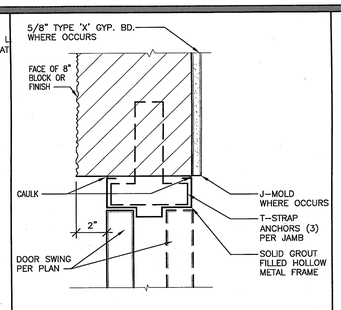

HM DOOR JAMB/HEAD @ CMU SCALE: 3"=1'-0" 2

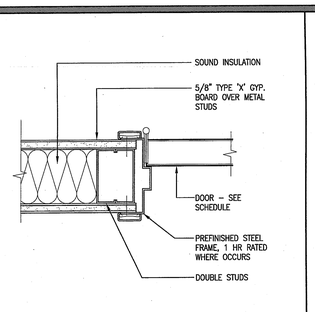

JAMB/HEAD- KD FRAME SCALE: 3"=1'-0" 3

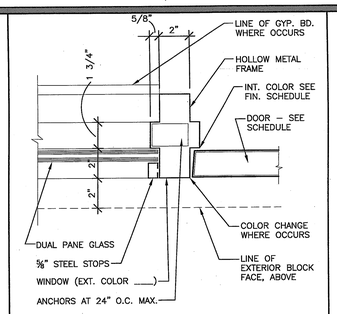

JAMB@ SIDELITE - HM FRAME SCALE: 3"=1'-0" 4

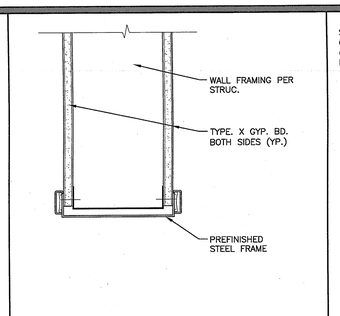

CASED OPENING SCALE: 3"=1'-0" 5

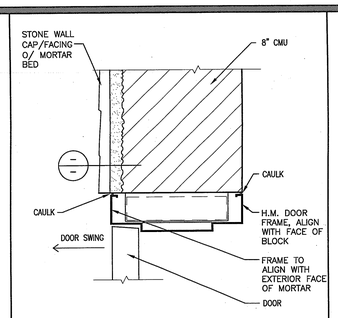

DOOR JAMB/HEAD @ CMU/STONE SCALE: 3"=1'-0" 6

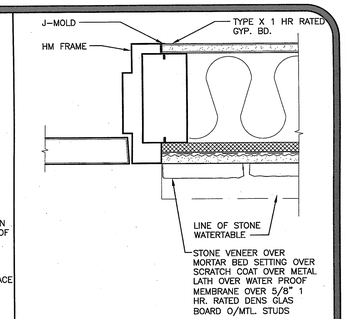

JAMB AT STONE SCALE: 3"=1'-0" 7

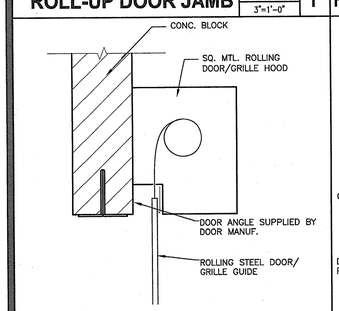

HEAD DET. ROLLING DOOR SCALE: 1-1/2"=1'-0" 8

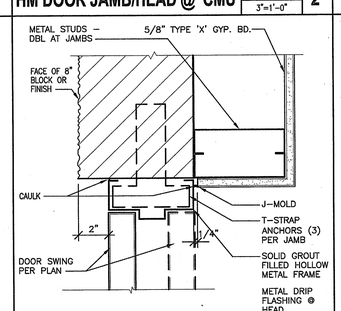

HM DOOR JAMB/HEAD @ CMU/STUD WALL SCALE: 3"=1'-0" 9

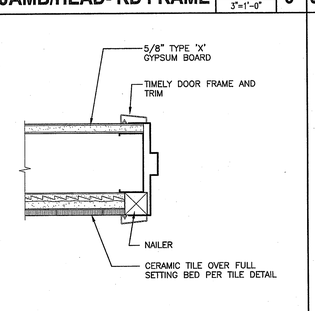

TILE DETAIL AT DOOR JAMB SCALE: 3"=1'-0" 10

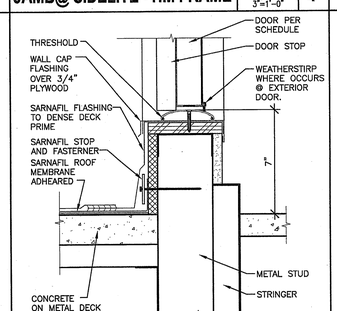

THRESHOLD SCALE: 3"=1'-0" 11

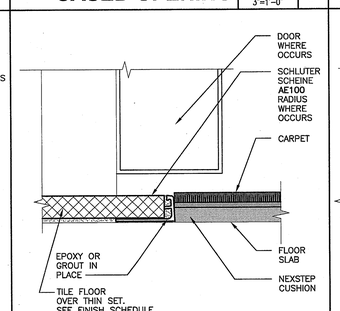

CARPET - TILE THRESHOLD SCALE: FULL SIZE 12

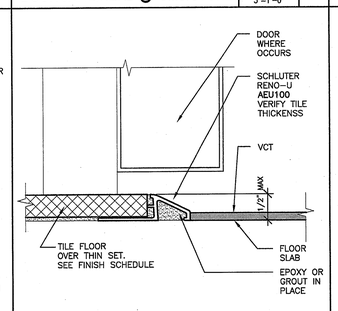

VCT - TILE THRESHOLD SCALE: FULL SIZE 13

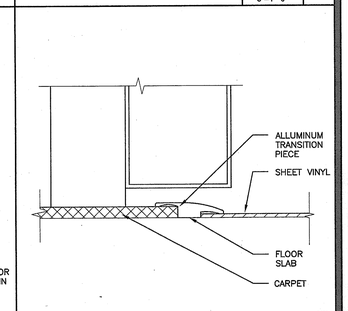

CARPET - S.V. THRESHOLD SCALE: FULL SIZE 14

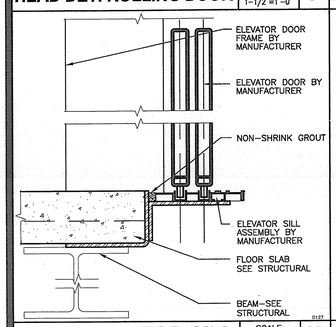

ELEVATOR SILL SCALE: 3"=1'-0" 15

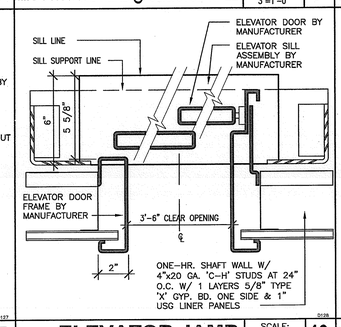

ELEVATOR JAMB SCALE: 3"=1'-0" 16

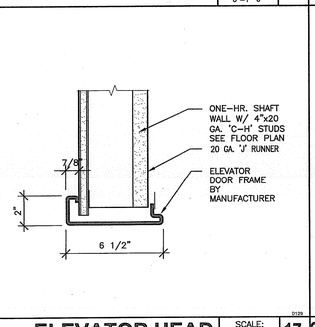

ELEVATOR HEAD SCALE: 3"=1'-0" 17

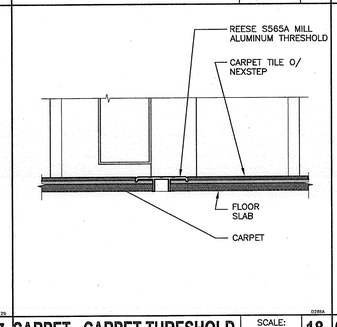

CARPET - CARPET THRESHOLD SCALE: 6"=1'-0" 18

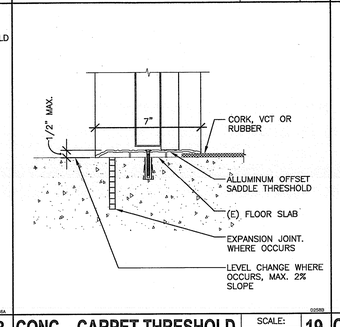

CONC. - CARPET THRESHOLD SCALE: 3"=1'-0" 19

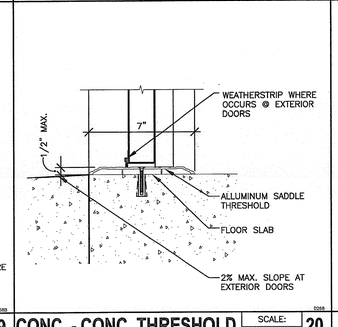

CONC. - CONC. THRESHOLD SCALE: 3"=1'-0" 20

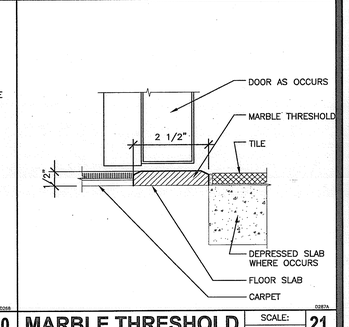

MARBLE THRESHOLD SCALE: 6"=1'-0" 21

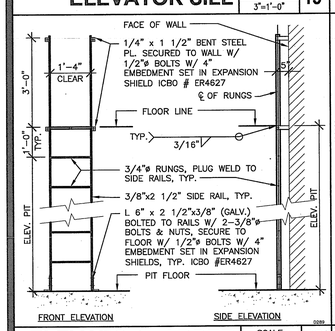

ELEVATOR LADDER SCALE: 1/2"=1'-0" 22

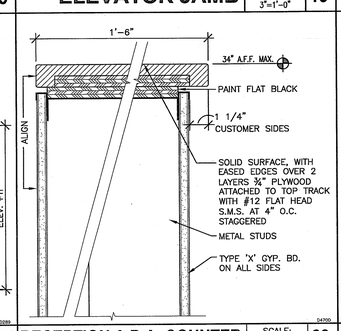

RECEPTION A.D.A. COUNTER SCALE: 3"=1'-0" 23

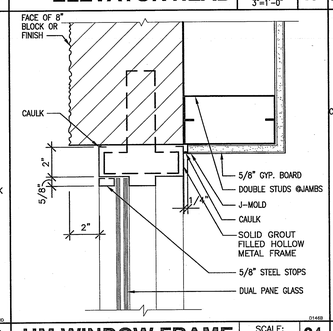

HM WINDOW FRAME SCALE: 3"=1'-0" 24

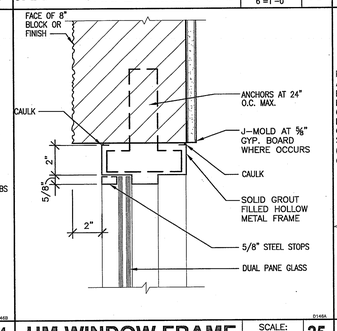

HM WINDOW FRAME SCALE: 3"=1'-0" 25

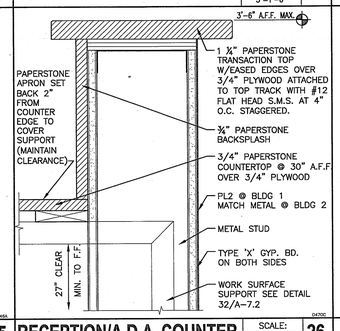

RECEPTION/A.D.A. COUNTER SCALE: 3"=1'-0" 26

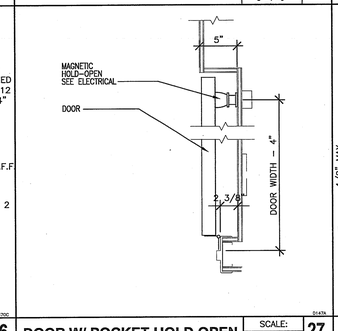

DOOR W/ POCKET HOLD OPEN SCALE: 1 1/2"=1'-0" 27

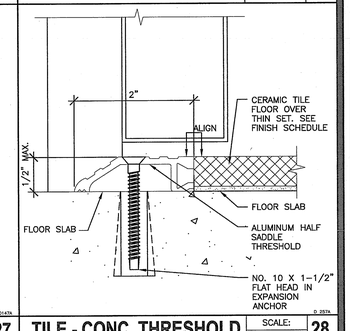

TILE - CONC. THRESHOLD SCALE: FULL SIZE 28

29

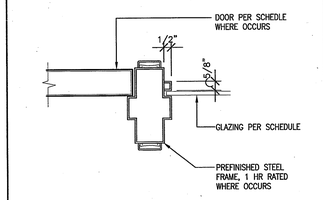

JAMB/SIDE LITE- KD FRAME SCALE: 3"=1'-0" 31

30

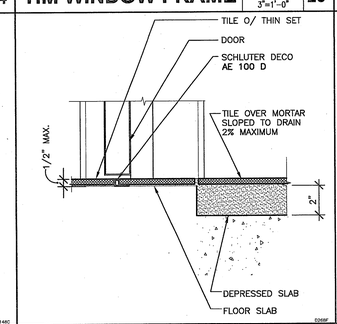

TILE - TILE THRESHOLD SCALE: 3"=1'-0" 32

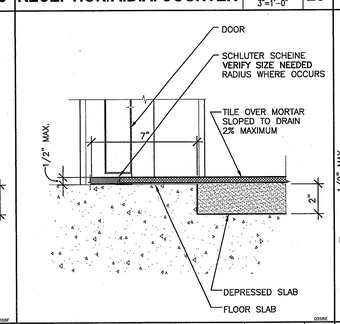

CARPET - TILE THRESHOLD SCALE: 3"=1'-0" 33

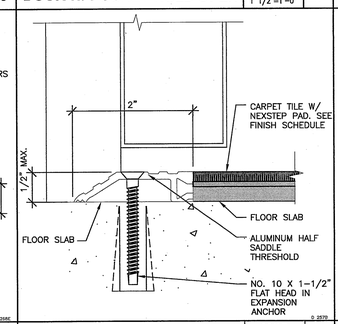

CARPET - CONC. THRESHOLD SCALE: FULL SIZE 34

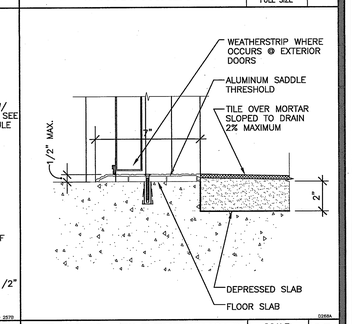

EXT. CONC. - TILE THRESHOLD SCALE: 3"=1'-0" 35

County of Orange
OC PUBLIC WORKS
Architecture & Engineering

Revisions					
0742	Sym.	Descrip.	Date	By	D.F.

Consultants

Drawn.	Chkd.	Date

A-E Seal

LICENSED ARCHITECT ALEXANDER + HIBBS, AIA, INC. STATE OF CALIFORNIA

A-E ALEXANDER + HIBBS, AIA, INC.

ALEXANDER + HIBBS, AIA, INC. Architecture and Planning 1300 E. Colorado Blvd. Suite 4 Pasadena, California 91801

Design	DA, MS	Chkd.	AH	Date	Nov. 26, 2009

Sht Title DETAILS

Project COUNTY OF ORANGE HEALTH CARE AGENCY
401 SOUTH TUSTIN STREET
401 SOUTH TUSTIN STREET
ORANGE, CA 92866

PROJ. NO. 100-042-P210-4200

Plan No. 52333-03608

Sheet A-7.1

0742 COUNTY OF ORANGE HEALTH CARE AGENCY 401 SOUTH TUSTIN STREET