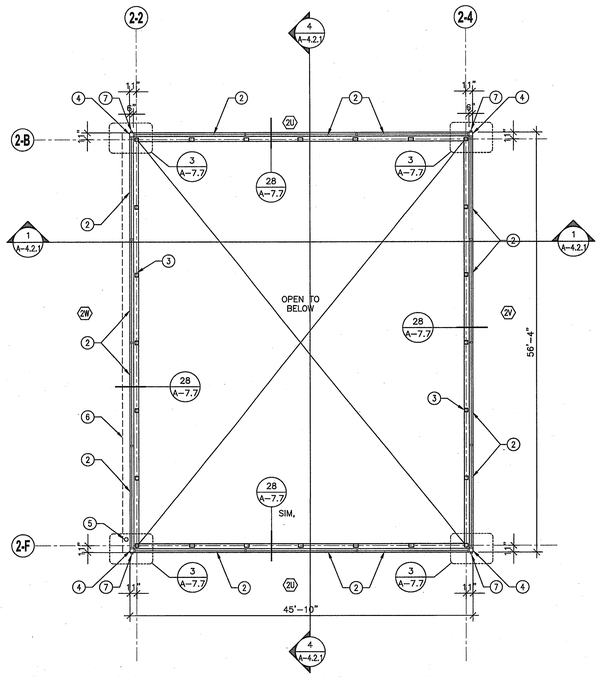

BUILDING 2 - CLEARSTORY PLAN

SCALE: 1/8"=1'-0"

1

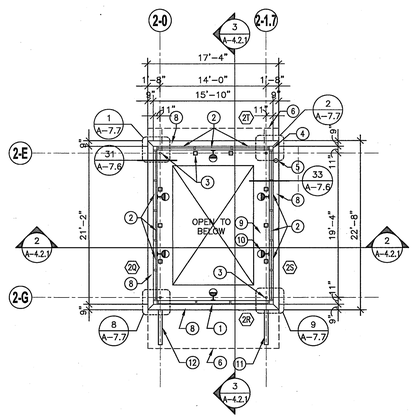

BUILDING 2 - TOWER PLAN

SCALE: 1/8"=1'-0"

2

KEYNOTES

1. ALUMINUM CURTAINWALL SYSTEM SEE SPECIFICATION SECTION 08410 WITH 1" INSULATED GLAZING.
2. CLAMPTITE KALWALL SYSTEM WITH 2 3/4" KALWALL PANEL SYSTEM SEE SPECIFICATION SECTION 08950.
3. STRUCTURAL MEMBERS – REFER TO STRUCTURAL DRAWINGS.
4. BREAK METAL CLOSURE, MATCH ALUMINUM CURTAINWALL SYSTEM FINISH.
5. FIRE SPRINKLER RISER THRU ROOF BELOW TO CLEARSTORY ROOF.
6. EDGE OF ROOF OVERHANG ABOVE.
7. ROOF DRAIN LEADER TO SPLASH BLOCK AT ROOF.
8. CAP FLASHING.
9. 3/4" PLYWOOD SILL.
10. LIGHT FIXTURE, REFER TO ELECTRICAL DRAWINGS.
11. TUBE BRACING, WITH RAIN LEADER, THRU CMU WALL TO DAYLIGHT SEE SHEET A-2.2.1 FOR ROOF DRAIN OUTLET LOCATION – PAINTED.
12. TUBE BRACING AT TOWER – PAINTED.

GENERAL NOTES:

A. NEW GLAZED WINDOW OPENINGS SHALL BE DUAL GLAZED AND LABELED WITH A CERTIFIED "U" VALUE OF 0.34 AND SHGC OF 0.28.

B. NEW TRANSLUCENT FENESTRATION SYSTEM PANEL: CRYSTAL/WHITE.
"U" VALUE NORTH WALL .29 AND
SOUTH/EAST AND WEST – .22
AND SHGC VALUE NORTH WALL .19
SOUTH/EAST AND WEST .10

LEGEND

DEPRESSED SLAB, REFER TO STRUCTURAL DRAWINGS.

EXTERIOR WALLS LEGEND:

8" CONCRETE MASONRY UNIT SOLID GROUT U.N.O.

8" CONCRETE MASONRY UNIT SOLID GROUT U.N.O. WITH 6" MTL. STUD FURRING, WITH R-19 BATT INSULATION, WITH 5/8" GYPSUM BOARD.

STONE VENEER FINISH OVER CONCRETE MASONRY UNIT

6" FULL HEIGHT METAL STUD 16 GA. AT 16" O.C. WITH STONE VENEER OVER 5/8" DENSEGOLD EXTERIOR SHEATHING, WITH R-19 BATT INSULATION, 5/8" GYPSUM BOARD AT INTERIOR SIDE. FOR 1-HR USE 5/8" TYPE 'X' GYPSUM BOARD.

1-HR

6" FULL HEIGHT METAL STUD 16 GA. WITH CMU VERNEER OVER 5/8" DENSEGOLD EXTERIOR SHEATHING, WITH R-19 BATT INSULATION, 5/8" GYPSUM BOARD AT INTERIOR SIDE.

INTERIOR WALL LEGEND:

1-HR INTERIOR OCCUPANCY SEPARATION 6"x20 GA. METAL STUD @ 16" O.C. WITH TYPE 'X' GYPSUM BOARD ON BOTH SIDES.

6" METAL STUD 20 GA. AT 16" O.C. WITH 5/8" GYPSUM BOARD BOTH SIDE. WATER RESISTANT GYPSUM BOARD AT WET LOCATION.

8" METAL STUD 20 GA. AT 16" O.C. PLUMBING WALL, 5/8" GYPSUM BOARD BOTH SIDE, WATER RISISTANT GYPSUM BOARD AT WET LOCATION.

6" FULL HEIGHT METAL STUD 20 GA. AT 16" O.C. WITH 5/8" TYPE 'X' TO UNDERSIDE OF DECK, WITH ACOUSTIBLOK AT ROOM 2-111, WITH 5/8" TYPE 'X' GYPSUM ON OTHER SIDE. ACOUSTICAL SEALANT AT TOP AND BOTTOM PLATE, SAFIN AT METAL DECK FOR SOUND INSULATION

6" LOW HEIGHT SCREEN WALL, WITH GLASS INSERT

NOTES:

1. FIRE BLOCK AT 10' INTERVALS BOTH HORIZONTAL AND VERTICAL AT STUD WALLS, ENCLOSED AND CONCEALED SPACES AND AT OPENINGS AROUND VENTS, PIPES, DUCTS, ETC. (708.2.1)
2. SEE TYPICAL FRAMING DETAILS 30/A-7.2
3. ALL INSULATION MATERIALS, INCLUDING THOSE COVERING PIPES AND TUBING AND INSULATION USED WITHIN FRAMING SHALL HAVE A FLAME-SPREAD RATING NOT TO EXCEED 25 AND A SMOKE DENSITY NOT TO EXCEED 450. (707.2 & 3)
4. PROVIDE 16 GA. STUDS @ ALL WALLS W/ CASEWORK AND @ ALL FRAMED OPENINGS.
5. PROVIDE WATER RESISTANT GYPSUM BOARD AT WET LOCATIONS.
6. SEE EXTERIOR ELEVATION FOR EXTERIOR FINISH.
7. PROVIDE ACOUSTIC INSULATION PER SPECIFICATION SECTION 07212, TYP. ALL WALLS.

KEY PLAN

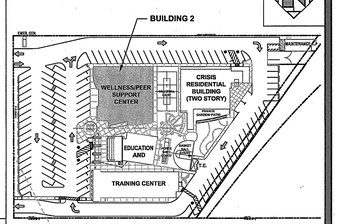

County of Orange
OC PUBLIC WORKS
Architecture & Engineering

Revisions			
Sym.	Descrip.	Date	By

0742

Consultants

Drawn	Chkd.	Date

A-E Seal

A-E ALEXANDER + HIBBS, AIA, INC.

Design	Chkd.	Date
DF	AH	Nov. 26, 2009

Sht Title BUILDING 2 - CLEARSTORY AND TOWER PLANS
Project COUNTY OF ORANGE HEALTH CARE AGENCY
401 SOUTH TUSTIN STREET
401 SOUTH TUSTIN STREET
ORANGE, CA 92866

PROJ. NO. 100-042-P210-4200

Plan No. 52333-03608

Sheet A-2.2.2

0742 COUNTY OF ORANGE HEALTH CARE AGENCY 401 SOUTH TUSTIN STREET