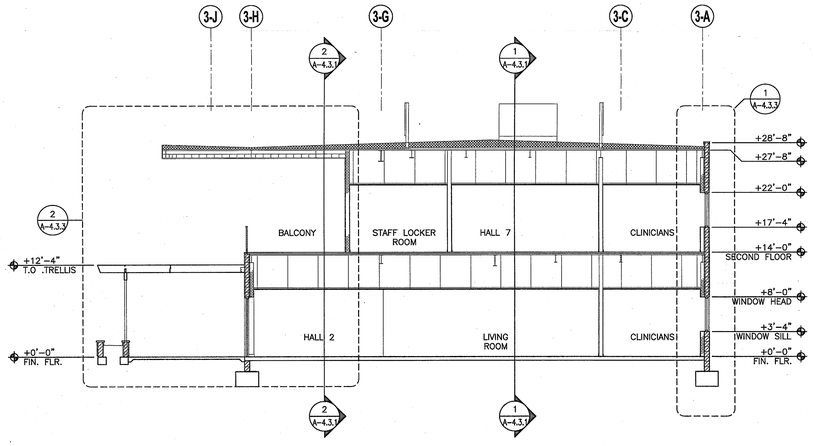

BUILDING 3 - BUILDING SECTION SCALE: 1/8"=1'-0" 4

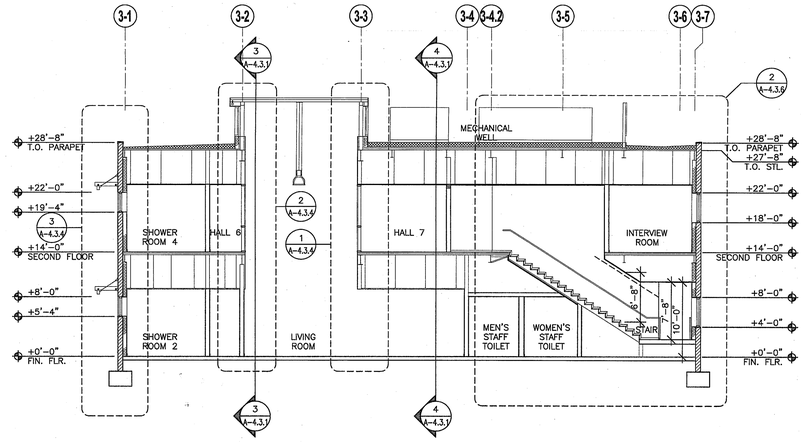

BUILDING 3 - BUILDING SECTION SCALE: 1/8"=1'-0" 1

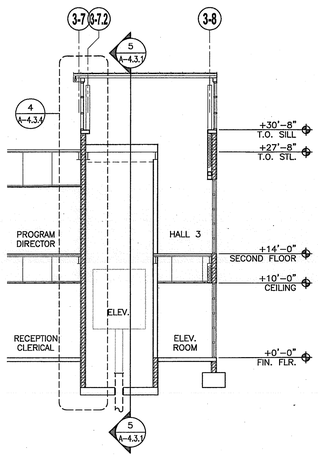

BUILDING 3 - BUILDING SECTION SCALE: 1/8"=1'-0" 7

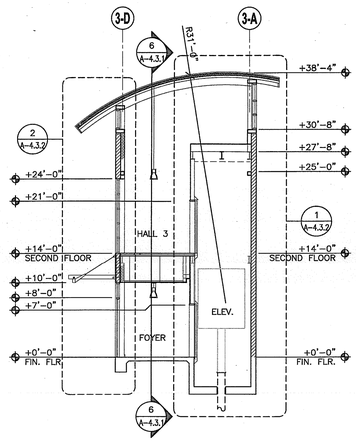

BUILDING 3 - BUILDING SECTION SCALE: 1/8"=1'-0" 5

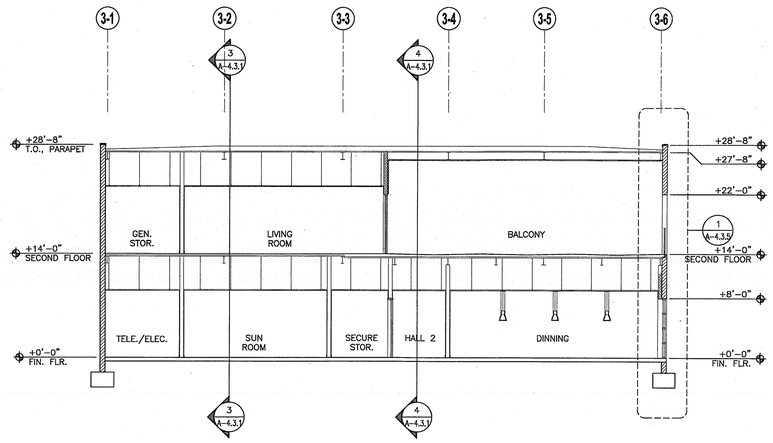

BUILDING 3 - BUILDING SECTION SCALE: 1/8"=1'-0" 2

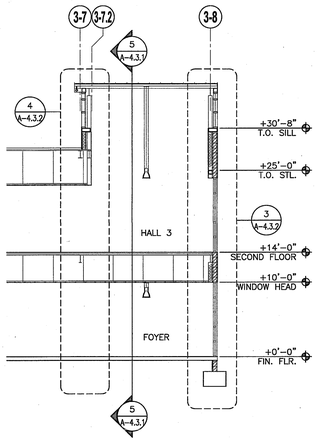

BUILDING 3 - BUILDING SECTION SCALE: 1/8"=1'-0" 6

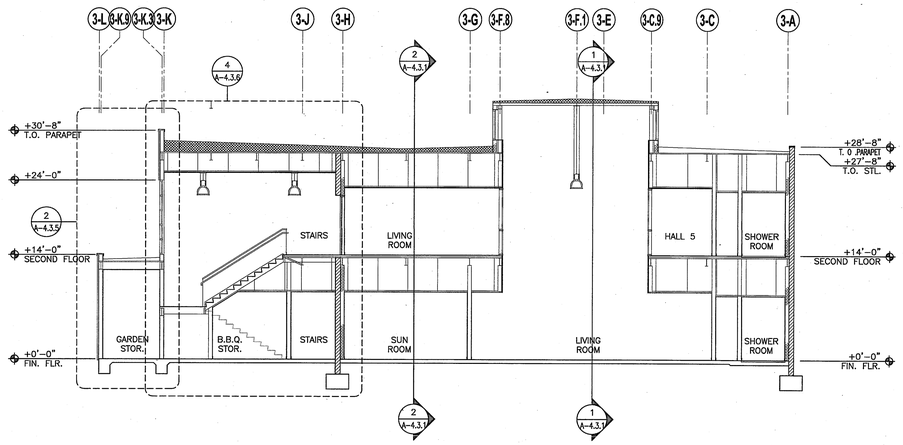

BUILDING 3 - BUILDING SECTION SCALE: 1/8"=1'-0" 3

KEY PLAN

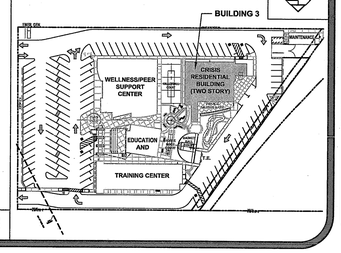

County of Orange
OC PUBLIC WORKS
Architecture & Engineering

Revisions

Sym.	Descrip.	Date	By

0742

Consultants

Drawn	Chkd.	Date

A-E Seal

A-E ALEXANDER + HIBBS, AIA, INC.

ALEXANDER + HIBBS AIA INC
Architecture and Planning
1000 N. Glassell, Suite A
Orange, California 92867
(714) 532-1344

Design	Chkd.	Date
DF	AH	Nov. 26, 2009

Sht Title BUILDING 3 - BUILDING SECTIONS

Project COUNTY OF ORANGE HEALTH CARE AGENCY
401 SOUTH TUSTIN STREET
401 SOUTH TUSTIN STREET
ORANGE, CA 92866

PROJ. NO. 100-042-P210-4200

Plan No.
52333-03608

Sheet
A-4.3.1

0742 COUNTY OF ORANGE HEALTH CARE AGENCY 401 SOUTH TUSTIN STREET