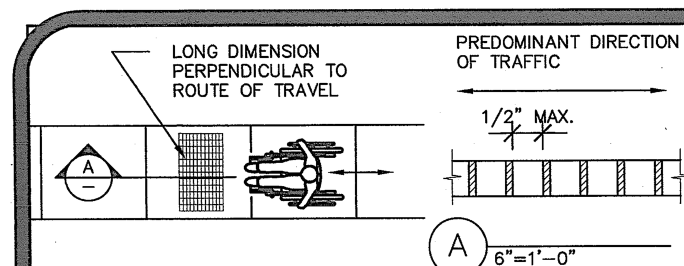

GRATING NOTES:

1. WALKS, SIDEWALKS, AND PEDESTRIAN WAYS SHOULD NOT HAVE GRATINGS.
2. WHERE GRATINGS OCCUR IN ANY OTHER PATH OF TRAVEL, THE GRID OPENINGS ARE REQUIRED TO BE NO GREATER THAN 1/2" IN THE DIRECTION OF TRAFFIC FLOW.

WALKS AND SIDEWALKS NOTES:

1. PRIVATE WALKS OR SIDEWALKS ARE REQUIRED TO BE ACCESSIBLE IF THEY LEAD TO BUILDINGS AND FACILITIES REQUIRED TO BE ACCESSIBLE.
2. MINIMUM WIDTH: 48".
3. WALKS AND SIDEWALKS SHALL HAVE CONTINUOUS COMMON SURFACE, NOT INTERRUPTED BY STEPS OR BY ABRUPT VERTICAL CHANGES IN LEVEL EXCEEDING 1/4". LEVEL CHANGES BETWEEN 1/4" AND 1/2" ARE BEVELED A MINIMUM OF 1:2.
4. SURFACES WITH SLOPE OF LESS THAN 6% GRADIENT SHALL BE SLIP-RESISTANT. SURFACE CROSS SLOPES SHALL NOT EXCEED 2% AND 5% IN THE DIRECTION OF TRAVEL.

D-AC-0004

ROUTE OF TRAVEL — SCALE: 3/16"=1'-0" — 1

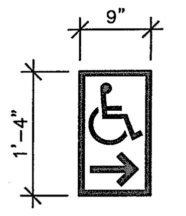

POLE OR WALL MOUNTED DIRECTIONAL SIGN TO BE REFLECTORIZED WITH WHITE SYMBOL, ARROW AND BORDER ON BLUE BACKGROUND

D-AC-0009

DIRECTIONAL SIGN — SCALE: 3/4"=1'-0" — 2

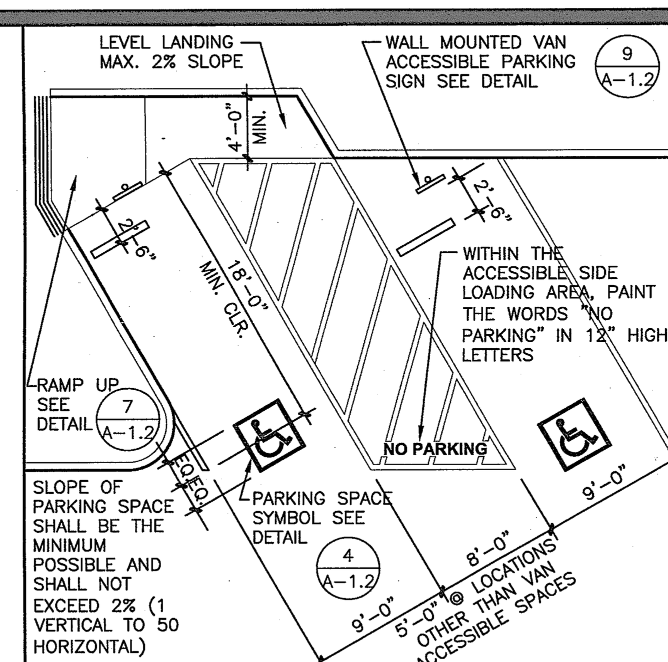

D-HC-0003

HANDICAP PARKING — SCALE: 1/8"=1'-0" — 3

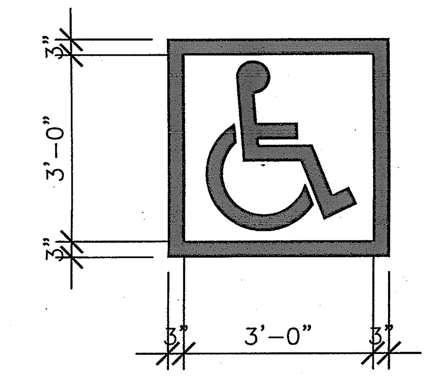

THE SURFACE OF EACH ACCESSIBLE PARKING SPACE OR STALL SHALL HAVE A SURFACE IDENTIFICATION WITH THE FOLLOWING SCHEME: BY OUTLINING A PROFILE WHEELCHAIR WITH OCCUPANT IN WHITE ON BLUE BACKGROUND. THE PROFILE VIEW SHALL BE LOCATED SO THAT IT IS VISIBLE TO A TRAFFIC ENFORCEMENT OFFICER WHEN A VEHICLE IS PROPERLY PARKED IN THE SPACE AND SHALL BE 36" HIGH BY 36" WIDE.

D-HC-0004

HANDICAP SYMBOL — SCALE: 1/2"=1'-0" — 4

THE BOTTOM OF THE EXIT SIGN SHALL NOT BE LESS THAN 6 INCHES (152 mm) OR MORE THAN 8 INCHES (203 mm) ABOVE THE FLOOR LEVEL AND SHALL INDICATE THE PATH OF EXIT TRAVEL. FOR EXIT AND EXIT-ACCESS DOORS, THE SIGN SHALL BE ON THE DOOR OR ADJACENT TO THE DOOR WITH THE LEADING EDGE OF THE SIGN OR MARKER WITHIN 4 INCHES (102 mm) OF THE DOOR FRAME. SECTION 1011.6

WHEN EXIT SIGNS ARE REQUIRED BY CBC 2007 CHAPTER 10, APPROVED PATH MARKING SHALL BE INSTALLED AT FLOOR LEVEL OR NO HIGHER THAN 8 INCHES (203 mm) ABOVE THE FLOOR LEVEL IN ALL INTERIOR CORRIDORS OF GROUP A ,E, I, R-1, R-2, AND R-4 OCCUPANCIES.

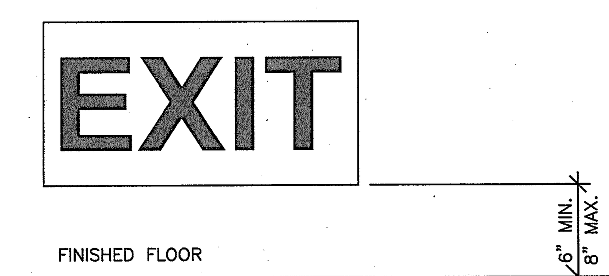

D-ES-0001

FLOOR LEVEL EXIT SIGN — SCALE: 1-1/2"=1'-0" — 5

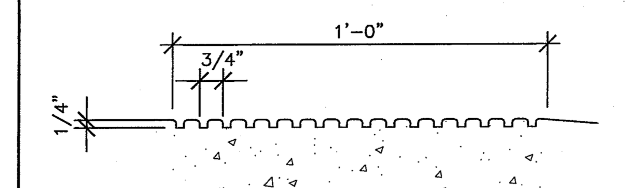

ALL CURB RAMPS SHALL HAVE A GROOVED BORDER 12" WIDE AT THE LEVEL SURFACE OF THE SIDEWALK ALONG THE TOP AND EACH SIDE APPROXIMATELY 3/4" ON CENTER.

D-HC-0005

GROOVED BORDER — SCALE: 3"=1'-0" — 6

PROVIDE 1/4"x1/4" GROOVES AT 3/4" O.C. AT TOP AND EACH SIDE OF CURB RAMP SEE DETAIL 6 / A-0.4 .

4" THICK CONCRETE PAVING WITH MEDIUM BROOM FINISH (ACROSS SLOPE) PROVIDE TRANCATED DOME SEE DETAIL 14 / A-0.4 .

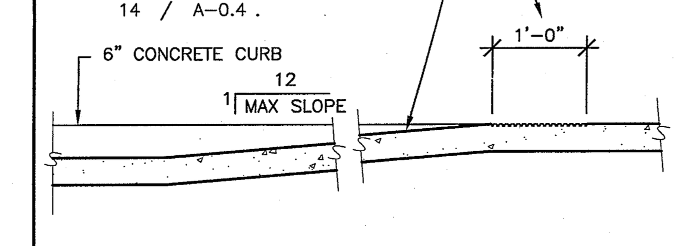

PROVIDE MIN. 4'-0" DEEP LEVEL LANDING AT TOP AND BOTTOM OF CURB RAMP

IF A WALK CROSSES OR ADJOINS A VEHICULAR WAY, AND THE WALK IS NOT SEPARATED BY A CURBS OR RAILINGS OR OTHER ELEMENTS BETWEEN THE PEDESTRIAN AREAS SHALL BE DEFINED BY A CONTINUOUS DETECTABLE WARNING WHICH IS 36 INCES WIDE. SEE DETAIL 14 / A-0.4.

D-HC-0008

CURB RAMP — SCALE: 3/4"=1'-0" — 1

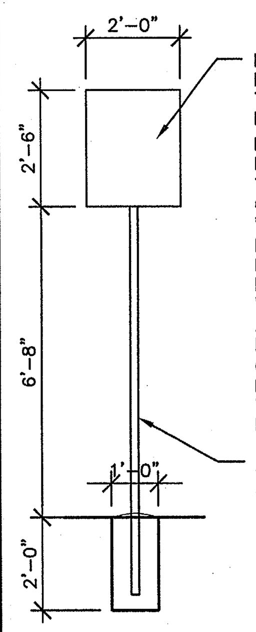

POLE MOUNTED SIGN TO BE REFLECTORIZED WITH WHITE SYMBOL, TEXT AND BORDER ON BLUE BACKGROUND

POST SIGN AT ALL PARKING LOT ENTRANCES WITH LETTERING NOT LESS THAN 1" IN HEIGHT WHICH CLEARLY AND CONSPICUOUSLY STATES THE FOLLOWING: "UNAUTHORIZED VEHICLES PARKED IN DESIGNATED ACCESSIBLE SPACES NOT DISPLAYING DISTINGUISHING PLACARDS OR LICENSE PLATES ISSUED FOR PERSONS WITH DISABILITIES MAY BE TOWED AWAY AT OWNER'S EXPENSE. TOWED VEHICLES MAY BE RECLAIMED AT ______________ OR BY TELEPHONING ______________." BLANK SPACES ARE TO BE FILLED IN WITH APPROPRIATE INFORMATION AS A PERMANENT PART OF THE SIGN.

2" ø PIPE SIGN POST WITH 12" ø X 24" DEEP CONCRETE FOOTING, EMBED POST 20" INTO FOOTING

D-HC-0007

SIGN — SCALE: 3/8"=1'-0" — 8

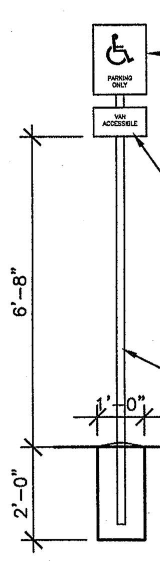

POLE MOUNTED SIGN TO BE REFLECTORIZED WITH WHITE SYMBOL, TEXT AND BORDER ON BLUE BACKGROUND MINIMUM 70 SQUARE INCHES

"VAN ACCESSIBLE" SIGN WHERE INDICATED ON PLAN

2" ø PIPE SIGN POST WITH 12" ø X 24" DEEP CONCRETE FOOTING ... EMBED POST 20" INTO FOOTING

D-HC-0006

SIGN — SCALE: 3/8"=1'-0" — 9

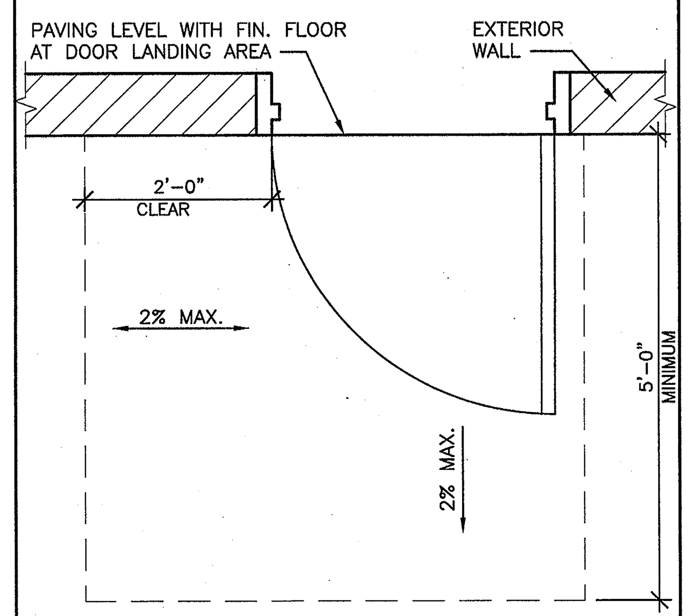

D050

EXTERIOR DOOR LANDING — SCALE: 3/4"=1'-0" — 10

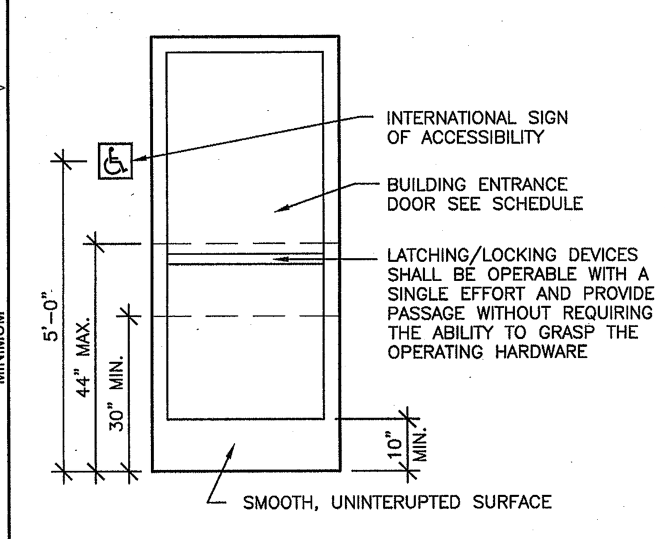

THE MAXIMUM EFFORT TO OPERATE DOOR SHALL NOT EXCEED 5 lbs FOR EXTERIOR DOORS AND INTERIOR DOORS

D202

BUILDING ENTRANCE — SCALE: 1/2"=1'-0" — 11

HANDICAP ACCESSIBLE THRESHOLD SHALL HAVE MAXIMUM 1/4" VERTICAL TRANSITION AND MAXIMUM 1/2" VERTICAL RISE. RISE IN EXCESS OF 1/4" SHALL HAVE 2:1 SLOPE MAXIMUM.

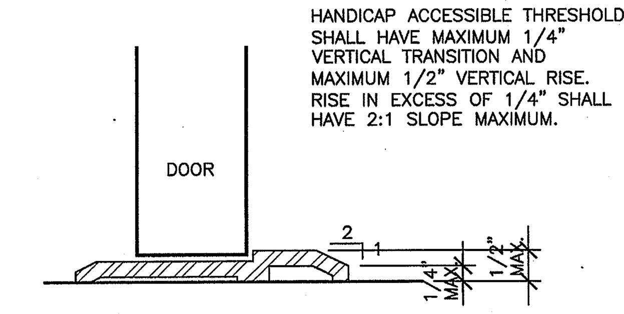

D143

THRESHOLD — SCALE: 6"=1'-0" — 12

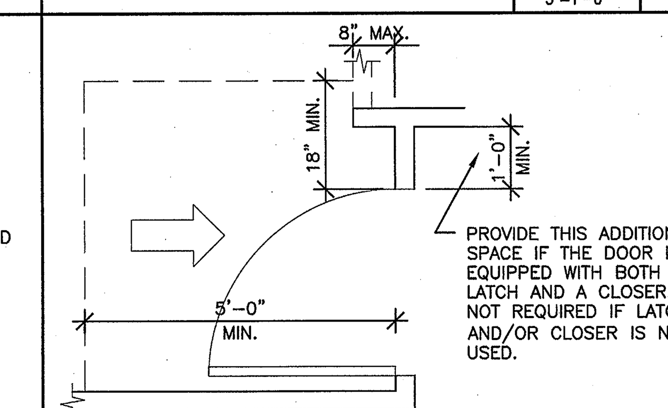

FIGURE 11B-33 CLEAR DOOR WIDTH AND DEPTH

(a) PULL SIDE (INTERIOR DOOR)

NOTE:

133B.2.4.5 WHERE A DOOR REQUIRED TO BE ACCESSIBLE BY SECTION 1133B.1.1. IS LOCATED IN A RECESS OR ALCOVE WHERE THE DISTANCE FROM THE FACE OT THE WALL TO THE FACE OF THE DOOR IS GREATER THAN 8, STRIKE SIDE CLEARANCE AS PRESCRIBED IN SECTION 1133B.2.4.3 SHALL BE PROVIDED. SEE FIGURE 11B-33(A).

D256

DOOR CLEARANCE — SCALE: 1/2"=1'-0" — 13

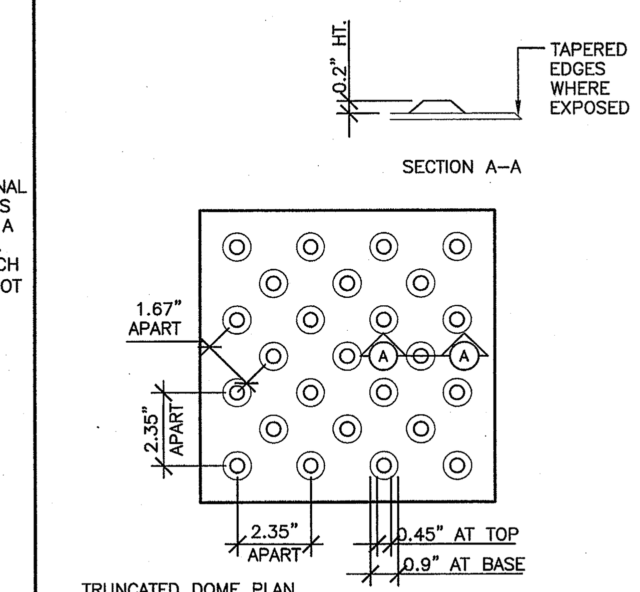

TRUNCATED DOME PLAN

D-AC-0001

DETECTABLE WARNING — SCALE: 3"=1'-0" — 14

EXTERIOR HAZARDS:

1. ABRUPT CHANGES IN LEVEL EXCEEDING 4" IN A VERTICAL HEIGHT, SUCH AS AT PLANTERS, FOUNTAINS OR FOUNDATIONS LOCATED IN OR ADJACENT TO WALKS, SIDEWALKS, OR OTHER PEDESTRIAN WAYS, REQUIRE WARNING CURBS AT LEAST 6" HIGH ABOVE THE WALKING SURFACE. NO CURB IS REQUIRED IF A GUARDRAIL IS PROVIDED CENTERED 3" PLUS OR MINUS 1" ABOVE SURFACE OF WALK OR SIDEWALK.

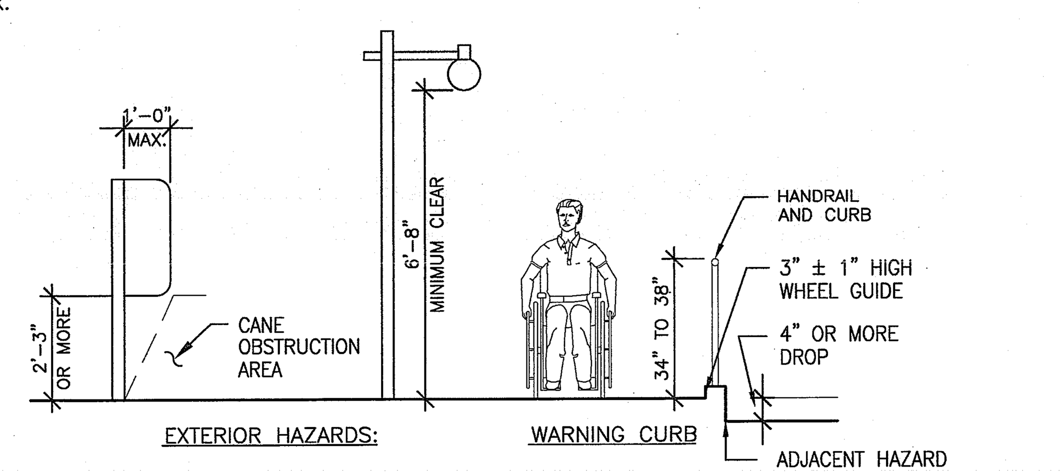

FLOORS:

1. FLOORS OF A GIVEN STORY ARE A COMMON FLOOR LEVEL THROUGHOUT, UNLESS CONNECTED BY CONFORMING RAMPS, ELEVATORS OR OTHER ACCESSIBLE MEANS OF VERTICAL ACCESS.
2. ALL FLOORS SHALL BE SLIP RESISTANT.

NOTES:

1. OBJECTS PROJECTING FROM WALLS WHOSE LEADING EDGES ARE BETWEEN 27" AND 79" ABOVE FINISH FLOOR CANNOT PROTRUDE MORE THAN 4" INTO WALKS AND HALLS.
2. OBJECTS WHOSE LEADING EDGES ARE AT OR BELOW 27" ABOVE FINISH FLOOR MAY PROTRUDE ANY DISTANCE, BUT MAY NOT REDUCE THE REQUIRED CLEAR SPACE.
3. FREE STANDING OBJECTS ON POSTS OR PYLONS MAY OVERHANG 4" MAX. FROM 27" TO 79" ABOVE FINISH FLOOR AND HAVE A RADIUS CORNER OF .125 INCHES.
4. WALKS, HALLS, CORRIDORS, PASSAGEWAYS, AISLES OR OTHER CIRCULATION SPACE SHALL HAVE 80" MINIMUM CLEAR HEAD ROOM.

D205

HAZZARDS — SCALE: 3/8"=1'-0" — 17

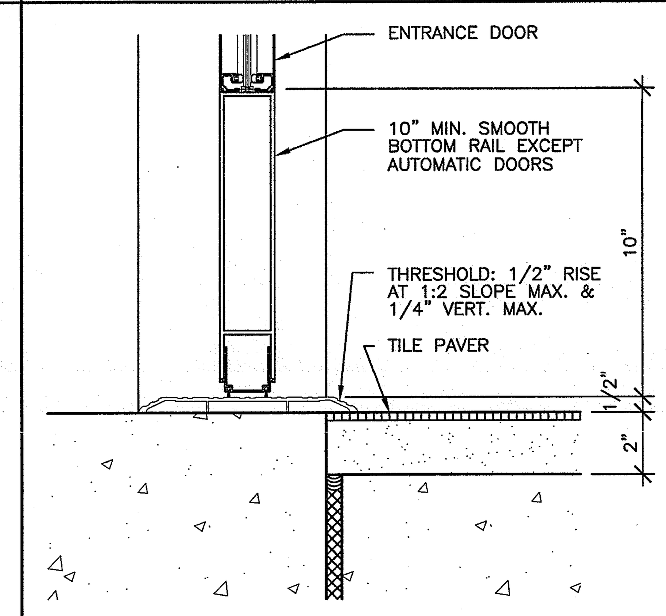

D033

ENTRY THRESHOLD — SCALE: 3"=1'-0" — 18

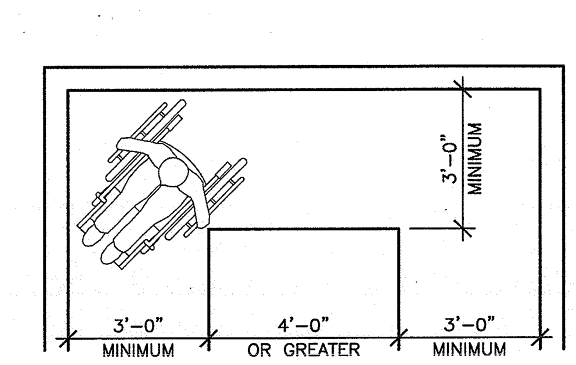

(a) 90° TURN

FIGURE 11B-5E WIDTH OF ACCESSIIBLE ROUTE

D-AC-0005

WIDTH OF ACCESSIBLE ROUTE — SCALE: 3/8"=1'-0" — 19

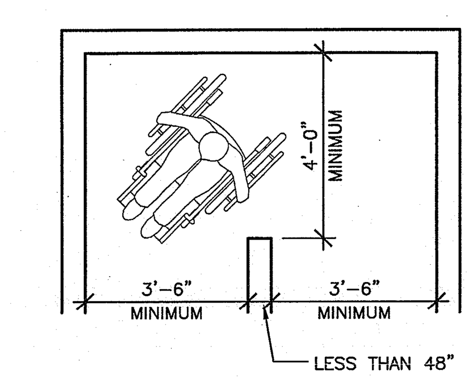

(b) TURN AROUND ON OBSTRUCTION

FIGURE 11B-5E WIDTH OF ACCESSIIBLE ROUTE

D-AC-0006

WIDTH OF ACCESSIBLE ROUTE — SCALE: 3/8"=1'-0" — 20

TACTILE SIGNAGE REQUIREMENT:

CHARACTERS ON SIGNS SHALL BE RAISED 1/32" MINIMUM AND SHALL BE SAN SERIF UPPERCASE CHARACTERS ACCOMPANIED BY GRADE 2 BRAILLE.

RAISED CHARACTERS SHALL BE A MINIMUM OF 5/8 INCHES AND A MAXIMUM OF 2 INCHES HIGH.

PICTORIAL SYMBOL SIGNS (PICTOGRAMS) SHALL BE ACCOMPANIED BY THE VERBAL DESCRIPTION PLACED DIRECTLY BELOW THE PICTOGRAM. THE OUTSIDE DIMENSION OF THE PICTOGRAM FIELD SHALL BE A MINIMUM OF 6" IN HEIGHT.

CHARACTERS AND BRAILLE SHALL BE IN A HORIZONTAL FORMAT. BRAILLE SHALL BE PLACED A MINIMUM OF 3/8" A MAXIMUM OF 1/2" DIRECTLY BELOW THE TACTILE CHARACTERS; FLUSH LEFT OR CENTER. WHEN TACTILE TEXT IS MULTILINED, ALL BRAILLE SHALL BE PLACED TOGETHER BELOW ALL LINES OF TACTILE TEXT.

CONTRACTED GRADE 2 BRAILLE SHALL BE USED WHEREVER BRAILLE IS REQUIRED. DOTS SHALL BE 1/10" ON CENTER IN EACH CELL WITH 2/10" SPACE BETWEEN CELLS, MEASURED FROM THE SECOND COLUMN OF DOTS IN THE FIRST CELL TO THE FIRST COLUMN OF DOTS IN THE SECOND CELL. DOTS SHALL BE RAISED A MINIMUM OF 1/40" ABOVE THE BACKGROUND. BRAILLE DOTS SHALL BE DOMED OR ROUNDED.

SIGNS SHALL BE INSTALLED ON THE WALL ADJACENT TO THE LATCH OUTSIDE THE DOOR. WHERE THERE IS NO WALL SPACE ON THE LATCH SIDE, INCLUDING DOUBLE LEAF DOORS, SIGNS SHALL BE PLACED ON THE NEAREST ADJACENT WALL, PREFERABLY TO THE RIGHT.

WHERE PERMANENT IDENTIFICATION SIGNAGE IS PROVIDED FOR ROOMS AND SPACES THEY SHALL BE LOCATED ON THE APPROACH SIDE OF THE DOOR AS ONE ENTERS THE ROOM OR SPACE. SIGNS THAT IDENTIFY EXIT SHALL BE LOCATED ON THE APPROACH SIDE OF THE DOOR AS ONE EXITS THE ROOM OR SPACE.

MOUNTING HEIGHT SHALL BE 60" ABO VE THE FINISH FLOOR TO THE CENTER OF THE SIGN. MOUNTING LOCATION SHALL BE DETERMINED SO THAT A PERSON MAY APPROACH WITHIN 3" OF SIGNAGE WITHOUT ENCOUNTERING PROTRUDING OBJECTS OR STANDING WITHIN THE SWING OF THE DOOR.

REQUIRED TACTILE SIGNS:

A. "EXIT STAIR DOWN"
B. "EXIT"
C. "TO EXIT"

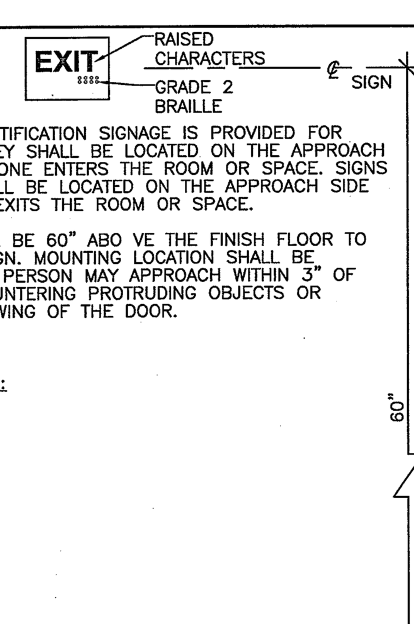

D-AC-0002

TACTILE EXIT SIGNAGE — SCALE: 1"=1'-0" — 23

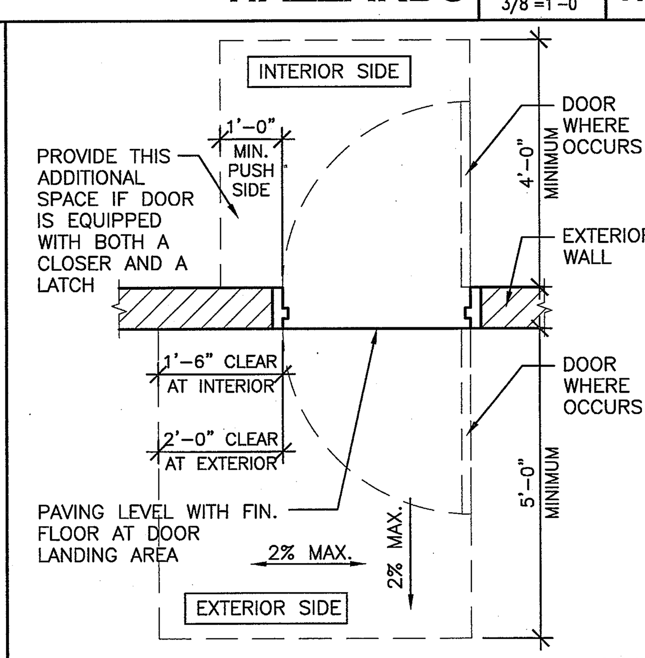

D-AC-0003

DOOR CLEARANCE — SCALE: 1/2"=1'-0" — 24

0742 COUNTY OF ORANGE HEALTH CARE AGENCY 401 SOUTH TUSTIN STREET

County of Orange
OC PUBLIC WORKS
Architecture & Engineering

Revisions: 0742 | Sym. | Descrip. | Date | By

Consultants — Drawn ___ Chkd. ___ Date ___

A-E Seal: LICENSED ARCHITECT ALLEN L. HIBBS NO. C10511 REN. 7/31/2011 STATE OF CALIFORNIA

A-E ALEXANDER + HIBBS, AIA, INC.
ALEXANDER + HIBBS, AIA, INC. Architecture and Planning 1200 N. JEFFERSON ST. SUITE A ANAHEIM, CALIFORNIA 92807 (714) 630-3886

Design DF Chkd. AH Date Nov. 26, 2009

Sht Title ACCESSIBILITY DETAILS
Project COUNTY OF ORANGE HEALTH CARE AGENCY 401 SOUTH TUSTIN STREET
401 SOUTH TUSTIN STREET ORANGE, CA 92866
PROJ. NO. 100-042-P210-4200

Plan No. 52333-03608

Sheet A-0.4