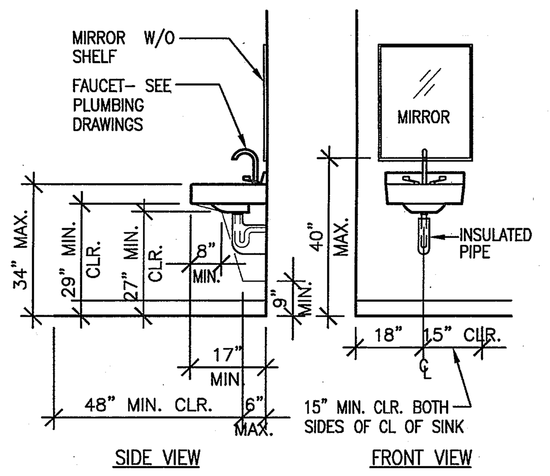

TYP. ACCESS. LAVATORY — SCALE: 3/8"=1'-0" — 1

NOTE:
TOILET ROOM ACCESSORIES SHALL BE LOCATED WITH ALL OPERABLE PARTS, INCLUDING COIN SLOTS, WITHIN +40" A.F.F.

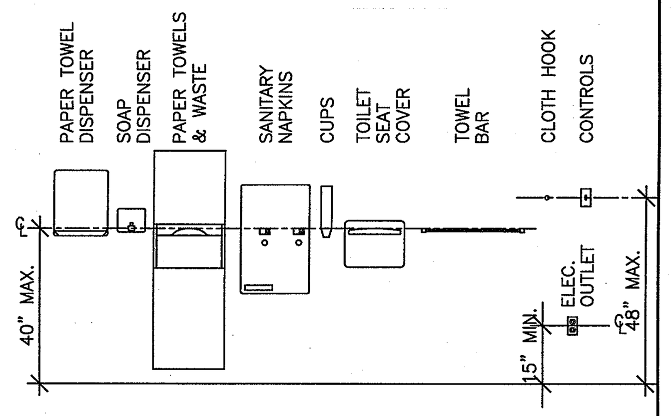

FORWARD/SIDE REACH POSSIBLE

TOILET RM. ACCESSORIES — SCALE: 3/8"=1'-0" — 2

NOTE:
1. FLUSH CONTROL VALVE SHALL BE OPERABLE WITH ONE HAND AND DOES NOT REQUIRE TIGHT GRASPING, PINCHING OR TWISTING OF THE WRIST. 5LB. MAX. PRESSURE TO OPERATE FLUSH VALVE.

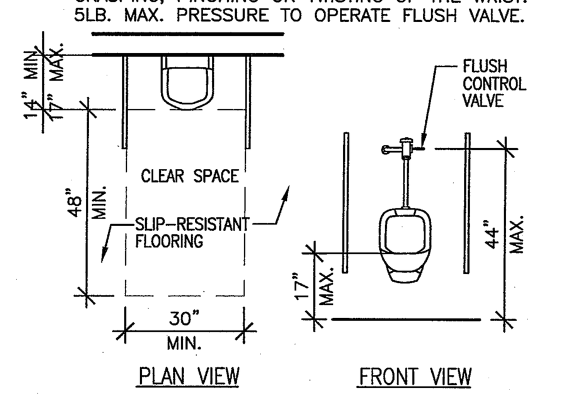

TYP. ACCESS. URINAL — SCALE: 3/8"=1'-0" — 3

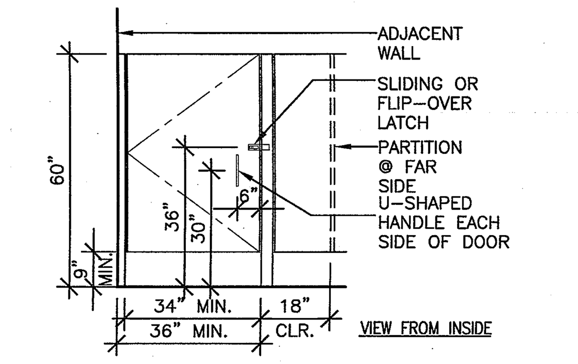

ACCESSIBLE COMPARTMENT DOOR NOTES
1. COMPARTMENT DOOR SHALL BE EQUIPPED WITH AN AUTOMATIC CLOSING DEVICE (3 SECOND MIN. SWEEP TIME FROM OPEN POSITION OF 70° TO A POINT 3" FROM THE LATCH)
2. COMPARTMENT DOOR PROVIDES A MIN. 9" CLR. FOR FOOTRESTS BELOW DOOR, OR A MIN. 18" STRIKE–SIDE CLEARANCE IS PROVIDED.

ACCESS. STALL DOOR — SCALE: 3/8"=1'-0" — 4

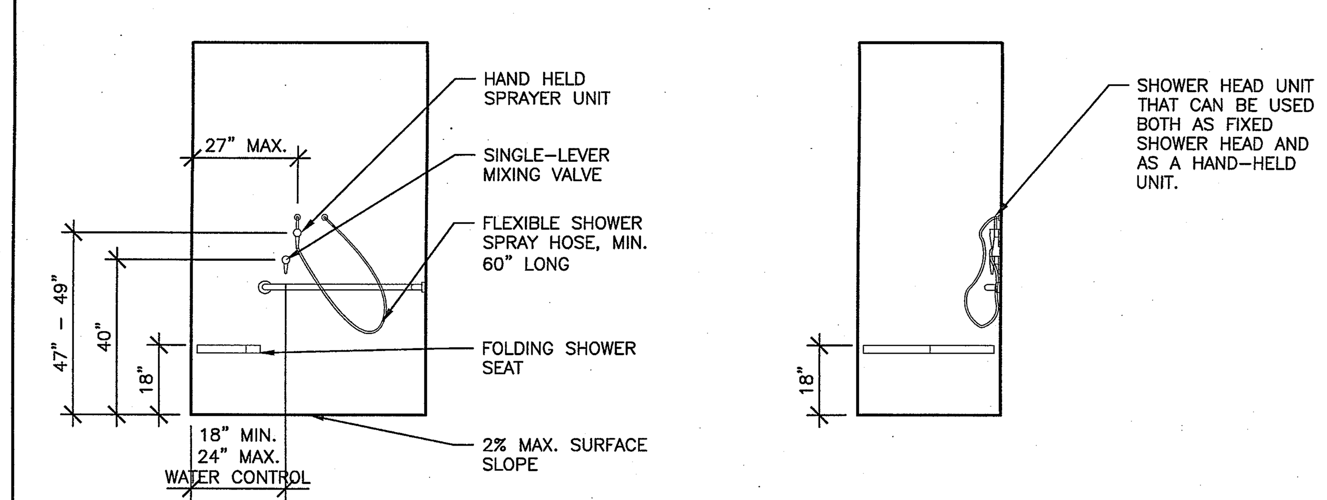

ACCESSIBLE SHOWER — SCALE: 3/8"=1'-0" — 7

CORRESPONDING REACH HEIGHTS FOR GIVEN DEPTHS:
WHEN D = 10" OR LESS, H = 54" MAX.
WHEN D = 11", H = 53.5" MAX.
WHEN D = 12", H = 53.0" MAX.
WHEN D = 13", H = 52.5" MAX.
WHEN D = 14", H = 51.5" MAX.
WHEN D = 15", H = 51.0" MAX.
WHEN D = 16", H = 50.5" MAX.
WHEN D = 17", H = 50.0" MAX.
WHEN D = 18", H = 49.5" MAX.
WHEN D = 19", H = 49.0" MAX.
WHEN D = 20", H = 48.5" MAX.
WHEN D = 21", H = 47.5" MAX.
WHEN D = 22", H = 47.0" MAX.
WHEN D = 23", H = 46.5" MAX.
WHEN D = 24", H = 46.0" MAX.

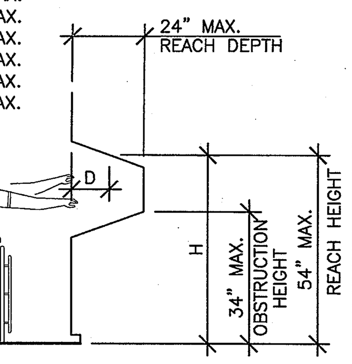

REACH RANGES — SCALE: 3/8"=1'-0" — 8

NOTE:
1. FLUSH CONTROL VALVE SHALL BE OPERABLE WITH ONE HAND AND DOES NOT REQUIRE TIGHT GRASPING, PINCHING OR TWISTING OF THE WRIST. 5LB. MAX. PRESSURE TO OPERATE FLUSH VALVE.
2. TOIL;ET PAPER HOLDER SHALL BE WITHOUT STOPS.

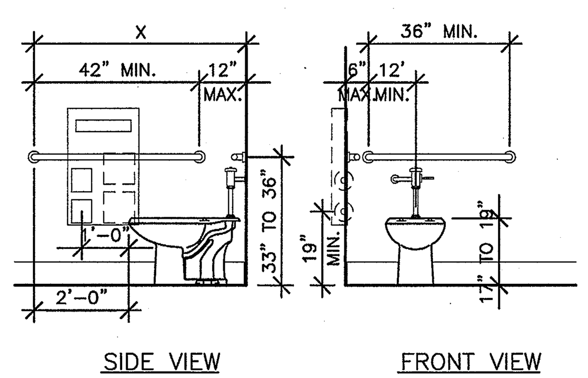

X=52" MINIMUM WHEN WATER CLOSETS ARE IN STALLS
X=54" MINIMUM WHEN WATER CLOSETS ARE NOT IN STALLS (SUCH AS IN SINGLE ACCOMIDATION ROOMS OR OPEN TOILETING SITUATIONS)

TYP. ACCESS. TOILET — SCALE: 3/8"=1'-0" — 9

DRINKING FOUNTAIN NOTES:
1. DRINKING FOUNTAINS ARE TO BE LOCATED WITHIN ALCOVES
 1.1. ALCOVES SHALL BE A MINIMUM OF 32" WIDE BY 18" DEEP
 1.2. PROTRUDING OBJECTS LOCATED IN ALCOVE MAY PROJECT 4" MAX. BEYOND ALCOVE.
2. OR WING WALLS SHALL BE PROVIDED ON EACH SIDE OF THE WATER FOUNTAIN PROJECTING AT LEAST AS FAR AS THE DRINKING FOUNTAIN.
 2.1. BOTTOM OF WING WALL SHALL BE WITHIN 6" OF THE SURFACE OF THE PATH OF TRAVEL.
 2.2. THERE SHALL BE A MINIMUM OF 32" BETWEEN WING WALLS.
3. THE DRINKING FOUNTAIN SHALL BE A MINIMUM OF 18" DEEP.
 3.1. DRINKING FOUNTAIN SHALL HAVE A MINIMUM KNEE SPACE (MEASURED FROM FRONT EDGE) OF 27" HIGH BY 8" DEEP.
 3.2. DRINKING FOUNTAIN SHALL HAVE A MINIMUM TOE CLEARANCE (MEASURED FROM FRONT EDGE) OF 9" HIGH BY 17" DEEP.
 3.3. LEVER OR PUSH BAR SHALL BE LOCATED WITHIN 6" OF THE FRONT EDGE OF THE FOUNTAIN AND SHALL REQUIRE A FORCE NOT EXCEEDING 5 lbf.TO ACTIVATE CONTROLS.
4. THE BUBBLER OUTLET HEIGHT SHALL BE LOCATED 36" MAXIMUM FROM THE FLOOR AND SHALL MAVE A MIMIMUM STREAM HEIGHT OF 4" AND SHALL BE PARALLEL TO THE FRONT EDGE OF THE DRINKING FOUNTAIN.

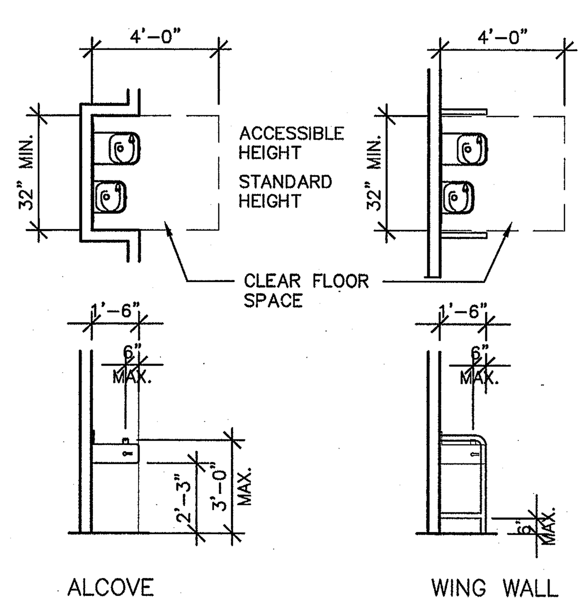

DRINKING FOUNTAIN — SCALE: 1/4"=1'-0" — 10

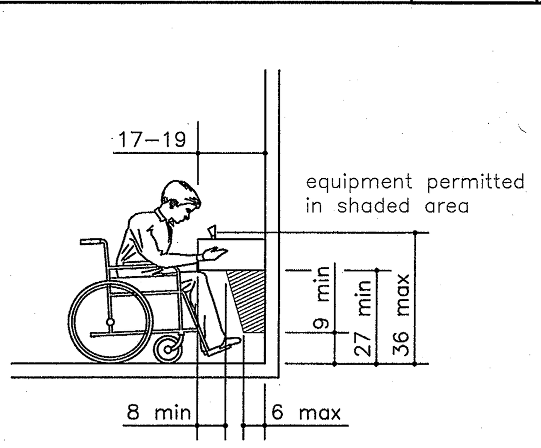

Spout Height and Knee Clearance

SEE HANDICAPPED ACCESS. NOTES ON ACCESSIBILITY SHEET A–0.1, A–0.2, A–0.3 FOR ADDITIONAL NOTES.

DRINKING FOUNTAIN — SCALE: N.T.S. — 11

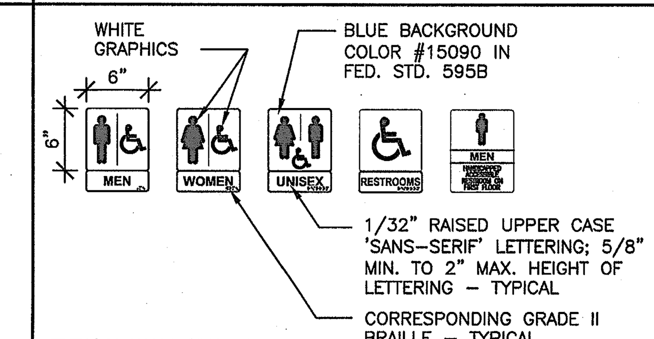

TYPICAL WALL SIGNAGE

NOTE: PICTOGRAMS/LETTERING ARE NOT REQUIRED ON DOOR–MOUNTED SIGNAGE

TYPICAL DOOR MOUNTED SIGNAGE

RESTROOM SIGNAGE — SCALE: 1"=1'-0" — 12

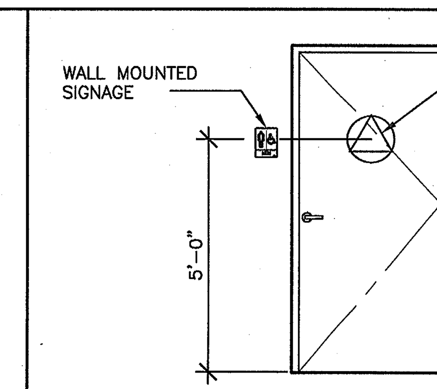

NOTES:
1. WALL MOUNTED SIGNAGE SHALL BE LOCATED ON LATCH SIDE OF DOOR
2. WALL MOUNTED SIGNAGE SHALL BE LOCATED SO AS TO ALLOW A PERSON TO APPROACH WITHIN 3" OF SIGNAGE WITHOUT ENCOUNTERING PROTRUDING OBJECTS OR STANDING WITHIN THE SWING OF A DOOR.
3. SIGN SHALL BE CENTERED ON WALL 60" FROM THE FLOOR
4. WALL MOUNTED SIGN SHALL BE A MINIMUM OF 6" IN HEIGHT.

RESTROOM SIGNAGE — SCALE: 3/8"=1'-0" — 13

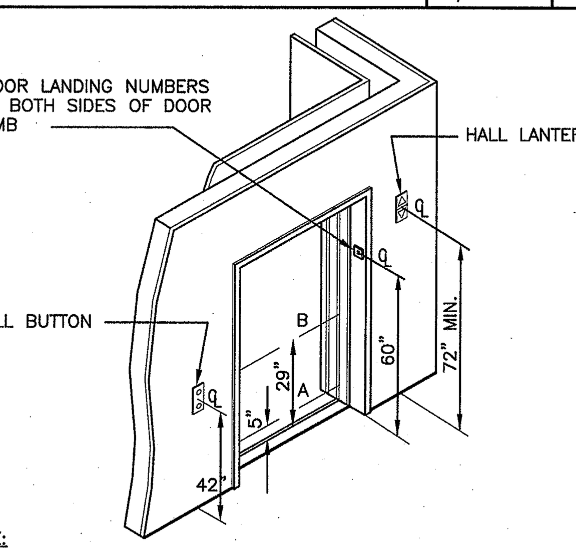

NOTE:
THE AUTOMATIC DOOR REOPENING DEVICE IS ACTIVATED IF AN OBJECT PASSES THROUGH EITHER LINE (A) OR LINE (B). LINE (A) AND LINE (B) REPRESENT THE VERTICAL LOCATION OF THE DOOR REOPENING DEVICE NOT REQUIRING CONTACT.
SEE ACCESSIBILITY NOTES K SHEET DA–1.

ELEVATOR ENTRANCE — SCALE: 1/4"=1'-0" — 14

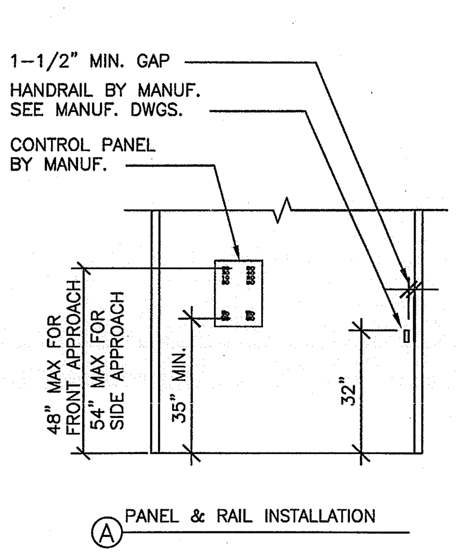

(A) PANEL & RAIL INSTALLATION

ELEVATOR MOUNTING HEIGHTS — SCALE: 3/8"=1'-0" — 15

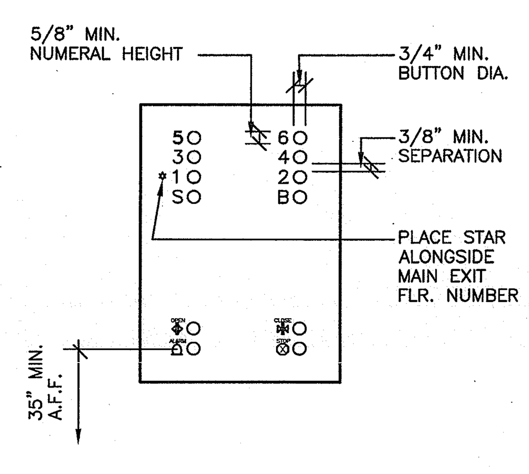

ELEVATOR CONTROL PANEL — SCALE: 1-1/2"=1'-0" — 16

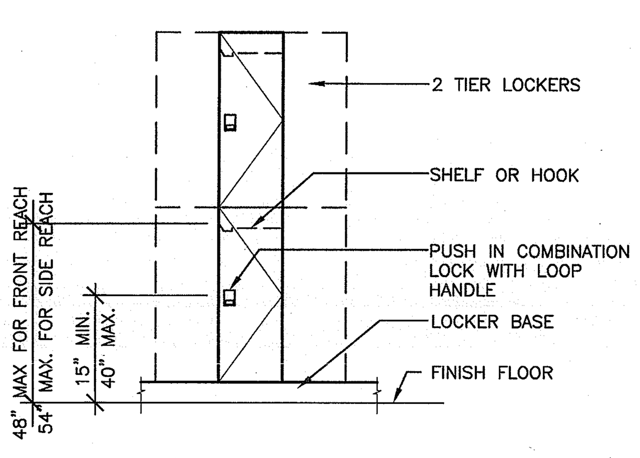

NOTE: A 30" x 48" CLEAR FLOOR AREA IS REQUIRED IN FRONT OF ACCESSIBLE LOCKER EITHER PARALLEL OR PERPENDICULAR TO THE LOCKER. IF ADJACENT FLOOR AREA HAS OBSTRUCTIONS SEE MANEUVERING CLEARANCES FOR ALCOVE REQUIREMENTS.

ACCESSIBLE LOCKER — SCALE: 1/2"=1'-0" — 17

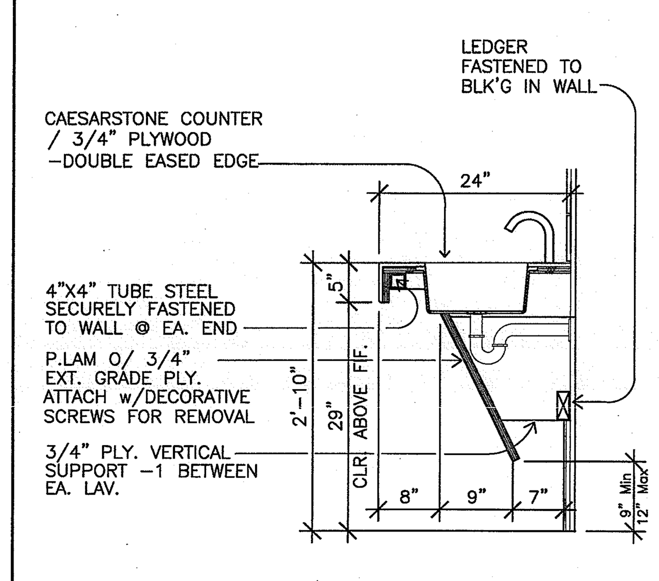

LAVATORY COUNTER — SCALE: 3/4"=1'-0" — 18

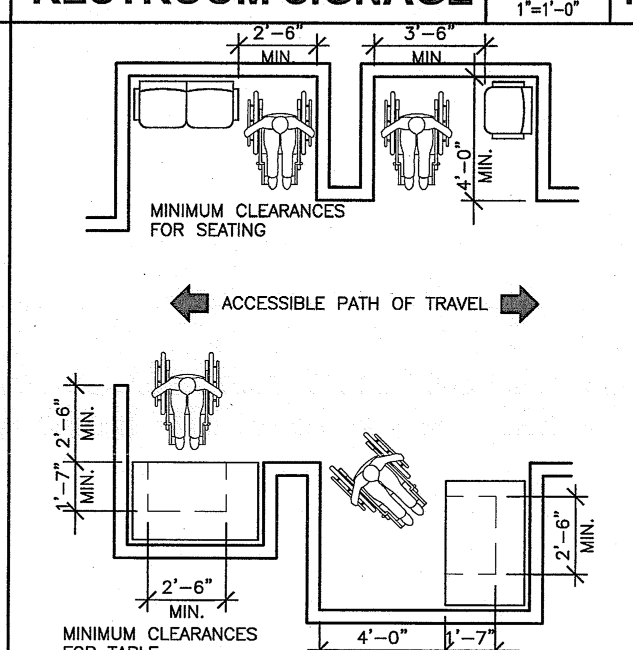

MINIMUM CLEARANCE — SCALE: 1"=1'-0" — 19

TACTILE SIGNAGE REQUIREMENT:

CHARACTERS ON SIGNS SHALL BE RAISED 1/32" MINIMUM AND SHALL BE SAN SERIF UPPERCASE CHARACTERS ACCOMPANIED BY GRADE 2 BRAILLE.

RAISED CHARACTERS SHALL BE A MINIMUM OF 5/8 INCHES AND A MAXIMUM OF 2 INCHES HIGH.

PICTORIAL SYMBOL SIGNS (PICTOGRAMS) SHALL BE ACCOMPANIED BY THE VERBAL DESCRIPTION PLACED DIRECTLY BELOW THE PICTOGRAM. THE OUTSIDE DIMENSION OF THE PICTOGRAM FIELD SHALL BE A MINIMUM OF 6" IN HEIGHT.

CHARACTERS AND BRAILLE SHALL BE IN A HORIZONTAL FORMAT. BRAILLE SHALL BE PLACED A MINIMUM OF 3/8" A MAXIMUM OF 1/2" DIRECTLY BELOW THE TACTILE CHARACTERS; FLUSH LEFT OR CENTER. WHEN TACTILE TEXT IS MULTILINED, ALL BRAILLE SHALL BE PLACED TOGETHER BELOW ALL LINES OF TACTILE TEXT.

CONTRACTED GRADE 2 BRAILLE SHALL BE USED WHEREVER BRAILLE IS REQUIRED. DOTS SHALL BE 1/10" ON CENTER IN EACH CELL WITH 2/10" SPACE BETWEEN CELLS, MEASURED FROM THE SECOND COLUMN OF DOTS IN THE FIRST CELL TO THE FIRST COLUMN OF DOTS IN THE SECOND CELL. DOTS SHALL BE RAISED A MINIMUM OF 1/40" ABOVE THE BACKGROUND. BRAILLE DOTS SHALL BE DOMED OR ROUNDED.

SIGNS SHALL BE INSTALLED ON THE WALL ADJACENT TO THE LATCH OUTSIDE THE DOOR. WHERE THERE IS NO WALL SPACE ON THE LATCH SIDE, INCLUDING DOUBLE LEAF DOORS, SIGNS SHALL BE PLACED ON THE NEAREST ADJACENT WALL, PREFERABLY TO THE RIGHT.

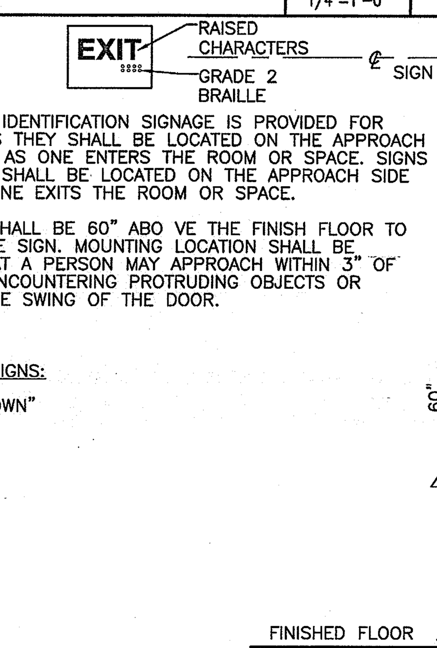

WHERE PERMANENT IDENTIFICATION SIGNAGE IS PROVIDED FOR ROOMS AND SPACES THEY SHALL BE LOCATED ON THE APPROACH SIDE OF THE DOOR AS ONE ENTERS THE ROOM OR SPACE. SIGNS THAT IDENTIFY EXIT SHALL BE LOCATED ON THE APPROACH SIDE OF THE DOOR AS ONE EXITS THE ROOM OR SPACE.

MOUNTING HEIGHT SHALL BE 60" ABO VE THE FINISH FLOOR TO THE CENTER OF THE SIGN. MOUNTING LOCATION SHALL BE DETERMINED SO THAT A PERSON MAY APPROACH WITHIN 3" OF SIGNAGE WITHOUT ENCOUNTERING PROTRUDING OBJECTS OR STANDING WITHIN THE SWING OF THE DOOR.

REQUIRED TACTILE SIGNS:
A. "EXIT STAIR DOWN"
B. "EXIT"
C. "TO EXIT"

TACTILE EXIT SIGNAGE — SCALE: 1"=1'-0" — 21

0742 COUNTY OF ORANGE HEALTH CARE AGENCY 401 SOUTH TUSTIN STREET

County of Orange
OC PUBLIC WORKS
Architecture & Engineering

0742	Revisions		
Sym.	Descrip.	Date	By

Consultants
Drawn___ Chkd.___ Date___

A-E Seal

A-E ALEXANDER + HIBBS, AIA, INC.
ALEXANDER + HIBBS, AIA, INC. Architecture and Planning
1200 N. JEFFERSON ST. SUITE A ANAHEIM, CALIFORNIA 92807 (714) 630-3686

Design DF Chkd. AH Date Nov. 26, 2009

Sht Title ACCESSIBILITY DETAILS
Project COUNTY OF ORANGE HEALTH CARE AGENCY 401 SOUTH TUSTIN STREET
401 SOUTH TUSTIN STREET ORANGE, CA 92866
PROJ. NO. 100-042-P210-4200

Plan No. 52333-03608

Sheet A-0.5