CEILING LEGEND

NOTES:

1. FOR ALL LIGHT FIXTURES, REFER TO ELECTRICAL DRAWINGS
2. FOR ALL MECHANICAL COMPONENTS, REFER TO MECHANICAL DRAWINGS

- 2'-0" x 2'-0" SUSPENDED ACOUSTIC TILE CEILING SEE PLAN FOR HEIGHT SEE DETAILS 11, 12, 15,16 & 17 / A-7.3
- 5/8" GYPSUM BOARD CEILING OVER METAL FRAMING, SEE PLAN FOR HEIGHT SEE DETAILS 6 & 7 / A-7.3. U.N.O.
- EPIC CEILING OVER METAL FRAMING. SEE EXTERIOR ELEVATION FOR HEIGHT.
- WOOD CEILING OVER METAL FRAMING.
- +9'-0" CEILING HEIGHT (FROM TOP OF SLAB)
- RECESSED 2'x4' FLUORESCENT LIGHT FIXTURE SEE ELECTICAL DRAWINGS
- CONTINUOUS RECESSED FLUORESCENT LIGHT FIXTURE SEE ELECTICAL DRAWINGS
- SURFACED MOUNTED FLUORESCENT LIGHT FIXTURE. SEE ELECTRICAL DRAWINGS
- SURFACED MOUNTED STRIP FLUORESCENT LIGHT FIXTURE. SEE ELECTRICAL DRAWINGS
- SUSPENDED FLUORESCENT LIGHT FIXTURE. SEE ELECTRICAL DRAWINGS
- WALL MOUNTED FLUORESCENT LIGHT FIXTURE. SEE ELECTRICAL DRAWINGS
- SURFACE MOUNTED FLUORESCENT LIGHT FIXTURE. SEE ELECTRICAL DRAWINGS
- RECESSED CAN FLUORESCENT DOWN-LIGHT FIXTURE 6" ROUND. SEE ELECTRICAL DRAWINGS
- RECESSED CAN FLUORESCENT DOWN-LIGHT FIXTURE 4.5" ROUND. SEE ELECTRICAL DRAWINGS
- SUSPENDED LIGHT FIXTURE. SEE ELECTRICAL DRAWINGS
- WALL MOUNTED LIGHT FIXTURE. SEE ELECTRICAL DRAWINGS
- WALL MOUNTED LIGHT FIXTURE. SEE ELECTRICAL DRAWINGS
- RECESSED WALL WASHER - UP LIGHT FIXTURE. SEE ELECTRICAL DRAWINGS
- WALL MOUNTED FLUORESCENT LIGHT FIXTURE. SEE ELECTRICAL DRAWINGS
- SP SURFACE MOUNTED SPEAKER
- MECHANICAL SUPPLY AIR DIFFUSER SEE MECHANICAL DRAWINGS
- MECHANICAL RETURN AIR DIFFUSER SEE MECHANICAL DRAWINGS
- MECHANICAL EXHAUST FAN GRILL REFER TO MECHANICAL DRAWINGS
- MECHANICAL EXHAUST FAN CEILING MOUNTED - REFER TO MECHANICAL DRAWINGS
- MECHANICAL SUPPLY AIR DIFFUSER LINEAR SEE MECHANICAL DRAWINGS
- MECHANICAL SUPPLY AIR DUCTSOX - SEE MECHANICAL DRAWINGS

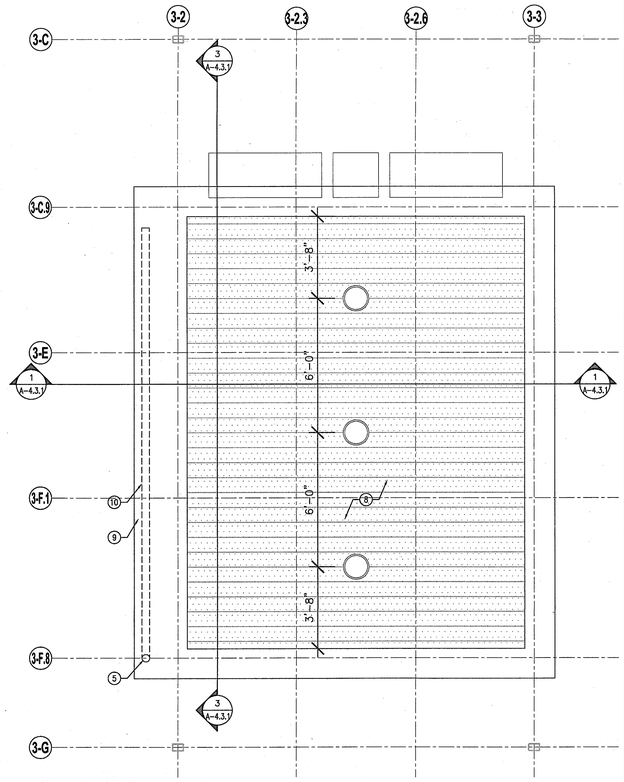

BUILDING 3 - CLEARSTORY REFLECTED CEILING PLAN — SCALE: 3/8"=1'-0" — 3

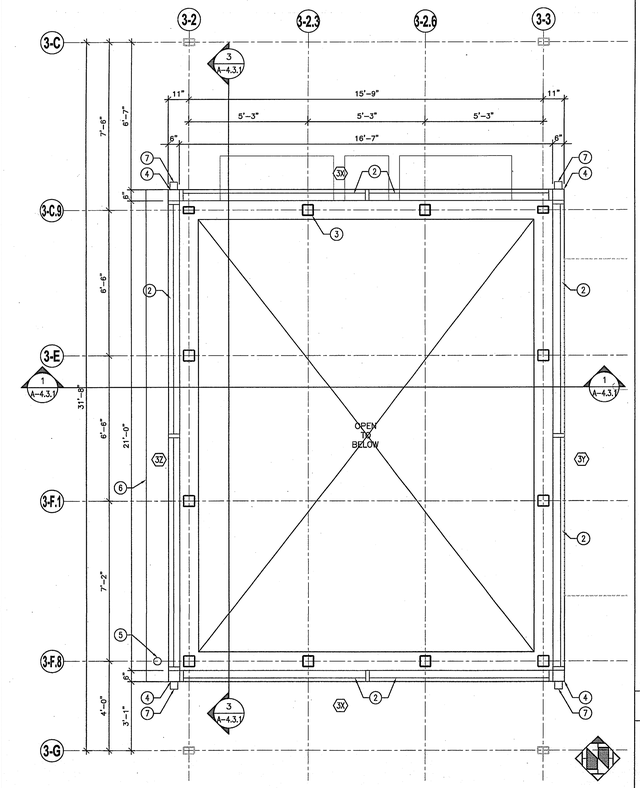

BUILDING 3 - CLEARSTORY PLAN — SCALE: 3/8"=1'-0" — 1

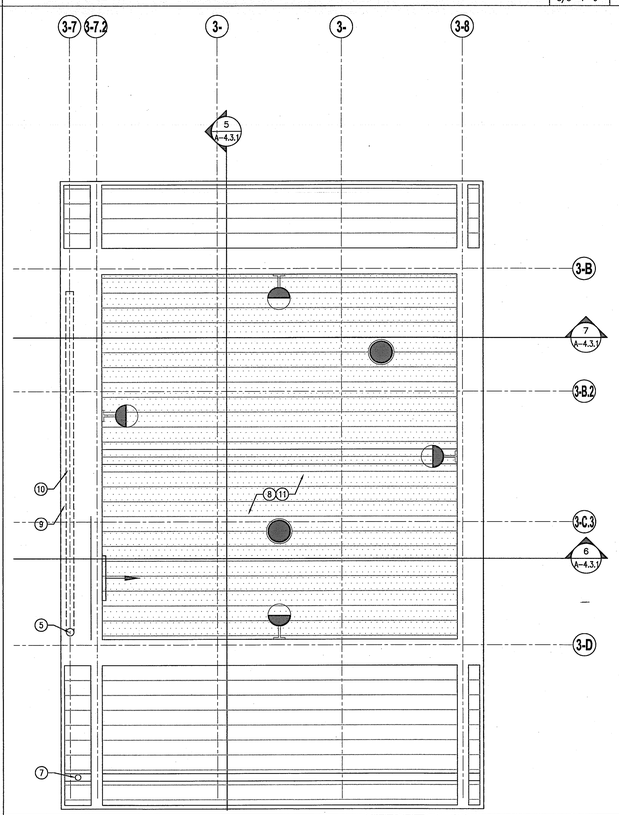

BUILDING 3 - TOWER REFLECTED CEILING PLAN — SCALE: 3/8"=1'-0" — 4

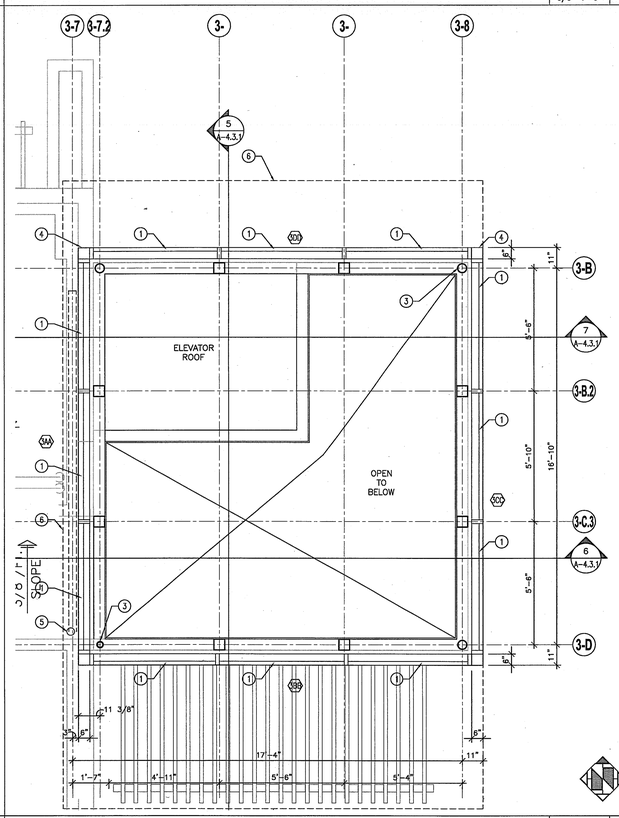

BUILDING 3 - TOWER PLAN — SCALE: 3/8"=1'-0" — 2

KEYNOTES

1. CLAMPTITE FRAME SYSTEM BY KALWALL WITH 2 3/4" KALWALL PANEL SYSTEM SEE SPECIFICATION SECTION 08950.
2. ALUMINUM CURTAINWALL SYSTEM, SEE SPECIFICATION SECTION 08410, WITH 2 3/4" KALWALL PANEL SYSTEM SEE SPECIFICATION SECTION 08950.
3. EXPOSED STRUCTURAL SYSTEM - REFER TO STRUCTURAL DRAWINGS.
4. BREAK METAL CLOSURE, MATCH ALUMINUM CURTAINWALL SYSTEM FINISH.
5. EXPOSED FIRE SPRINKLER RISER THRU ROOF BELOW TO CLEARSTORY ROOF.
6. EDGE OF ROOF OVERHANG ABOVE.
7. ROOF DRAIN LEADER TO SPLASHBLOCK AT ROOF.
8. EXPOSED EPIC DECK CEILING. SEE FINISH SCHEDULE FOR FINISH.
9. METAL SOFFIT.
10. FIRE SPRINKLER LINE ENCLOSED WITHIN METAL SOFFIT.
11. CURVE CEILING.

LEGEND

- DEPRESSED SLAB, REFER TO STRUCTURAL DRAWINGS.

EXTERIOR WALLS LEGEND:

- 8" CONCRETE MASONRY UNIT SOLID GROUT U.N.O.
- 8" CONCRETE MASONRY UNIT SOLID GROUT U.N.O. WITH 6" MTL. STUD FURRING, WITH R-19 BATT INSULATION, WITH 5/8" GYPSUM BOARD.
- STONE VENEER FINISH OVER CONCRETE MASONRY UNIT
- 6" FULL HEIGHT METAL STUD 16 GA. AT 16" O.C. WITH STONE VENEER OVER 5/8" DENSEGOLD EXTERIOR SHEATHING, WITH R-19 BATT INSULATION, 5/8" GYPSUM BOARD AT INTERIOR SIDE. FOR 1-HR USE 5/8" TYPE 'X' GYPSUM BOARD.
- 1-HR 6" FULL HEIGHT METAL STUD 16 GA. WITH CMU VERNEER OVER 5/8" DENSEGOLD EXTERIOR SHEATHING, WITH R-19 BATT INSULATION, 5/8" GYPSUM BOARD AT INTERIOR SIDE.

INTERIOR WALL LEGEND:

- 1-HR INTERIOR OCCUPANCY SEPARATION 6"x20 GA. METAL STUD @ 16" O.C. WITH TYPE 'X' GYPSUM BOARD ON BOTH SIDES.
- 6" METAL STUD 20 GA. AT 16" O.C. WITH 5/8" GYPSUM BOARD BOTH SIDE. WATER RESISTANT GYPSUM BOARD AT WET LOCATION.
- 8" METAL STUD 20 GA. AT 16" O.C. PLUMBING WALL, 5/8" GYPSUM BOARD BOTH SIDE, WATER RISISTANT GYPSUM BOARD AT WET LOCATION.
- 6" FULL HEIGHT METAL STUD 20 GA. AT 16" O.C. WITH 5/8" TYPE 'X' TO UNDERSIDE OF DECK, WITH ACOUSTIBLOK AT ROOM 2-111, WITH 5/8" TYPE 'X' GYPSUM ON OTHER SIDE. ACOUSTICAL SEALANT AT TOP AND BOTTOM PLATE, SAFIN AT METAL DECK FOR SOUND INSULATION
- 6" LOW HEIGHT SCREEN WALL, WITH GLASS INSERT

NOTES:

1. FIRE BLOCK AT 10' INTERVALS BOTH HORIZONTAL AND VERTICAL AT STUD WALLS, ENCLOSED AND CONCEALED SPACES AND AT OPENINGS AROUND VENTS, PIPES, DUCTS, ETC. (708.2.1)
2. SEE TYPICAL FRAMING DETAILS 30/A-7.2
3. ALL INSULATION MATERIALS, INCLUDING THOSE COVERING PIPES AND TUBING AND INSULATION USED WITHIN FRAMING SHALL HAVE A FLAME-SPREAD RATING NOT TO EXCEED 25 AND A SMOKE DENSITY NOT TO EXCEED 450. (707.2 & 3)
4. PROVIDE 16 GA. STUDS @ ALL WALLS W/ CASEWORK AND @ ALL FRAMED OPENINGS.
5. PROVIDE WATER RESISTANT GYPSUM BOARD AT WET LOCATIONS.
6. SEE EXTERIOR ELEVATION FOR EXTERIOR FINISH.
7. PROVIDE ACOUSTIC INSULATION PER SPECIFICATION SECTION 07212, TYP. ALL WALLS.

KEY PLAN

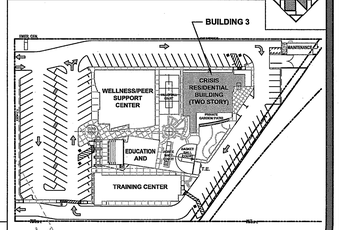

County of Orange — OC PUBLIC WORKS — Architecture & Engineering

Revisions: 0742 — Sym. | Descrip. | Date | By

Consultants: Drawn | Chkd. | Date

A-E Seal: LICENSED ARCHITECT, ALAN L. HIBBS, NO. C16511, EXP. 12/31/2011, STATE OF CALIFORNIA

A-E: ALEXANDER + HIBBS, AIA, INC. — Date: Nov. 26, 2009

ALEXANDER + HIBBS, AIA, INC. — Architecture and Planning — 2000 S. Bristol, Suite A, Santa Ana, California 92704 — (714) 556-1888

Design: DF — Chkd.: AH

Sht Title: BUILDING 3 - CLEARSTORY AND TOWER PLANS

Project: COUNTY OF ORANGE HEALTH CARE AGENCY, 401 SOUTH TUSTIN STREET, 401 SOUTH TUSTIN STREET, ORANGE, CA 92866

PROJ. NO. 100-042-P210-4200

Plan No. 52333-03608

Sheet A-2.3.7

0742 COUNTY OF ORANGE HEALTH CARE AGENCY 401 SOUTH TUSTIN STREET