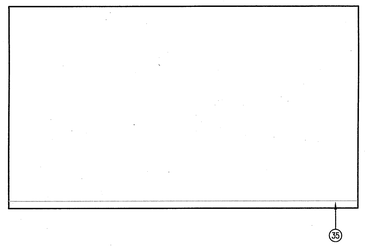

1

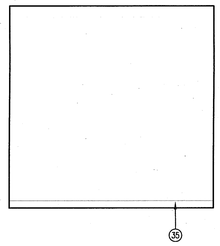

2

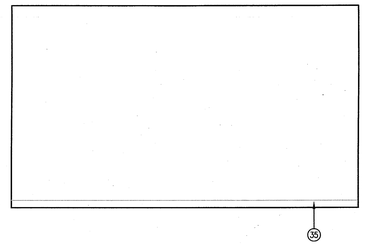

3

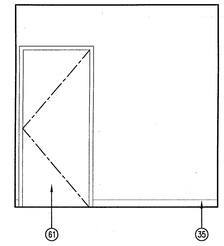

4

CONFERENCE STORAGE - BUILDING 1

SCALE: 3/8"=1'-0" | 119

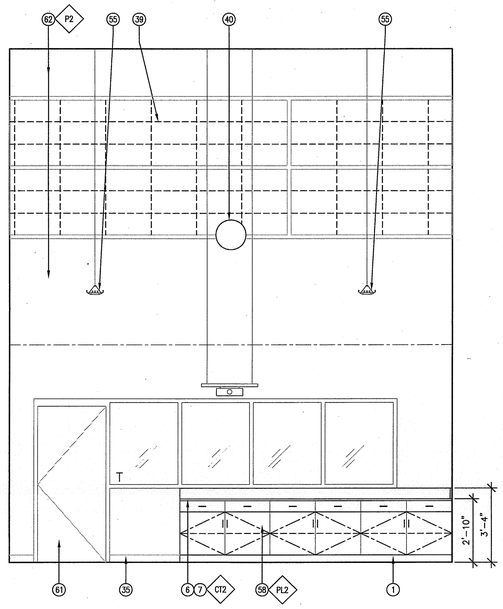

1

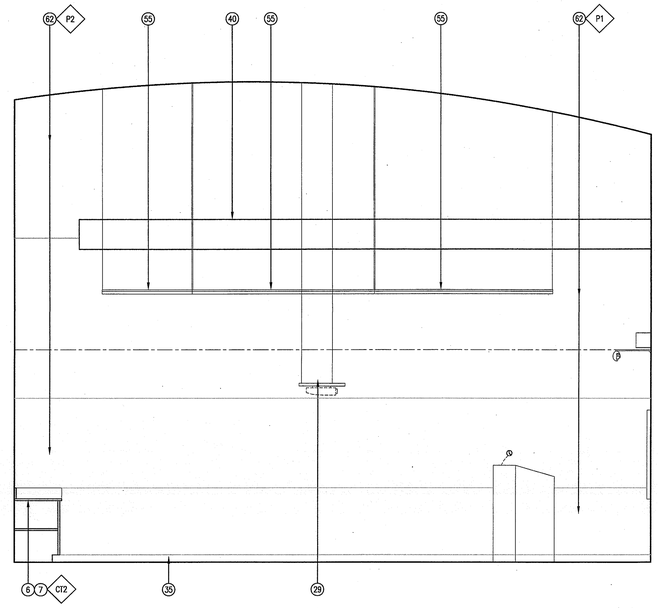

2

CLASSROOM 120, 121, 122 & 123 - BUILDING 1

SCALE: 3/8"=1'-0" | 120

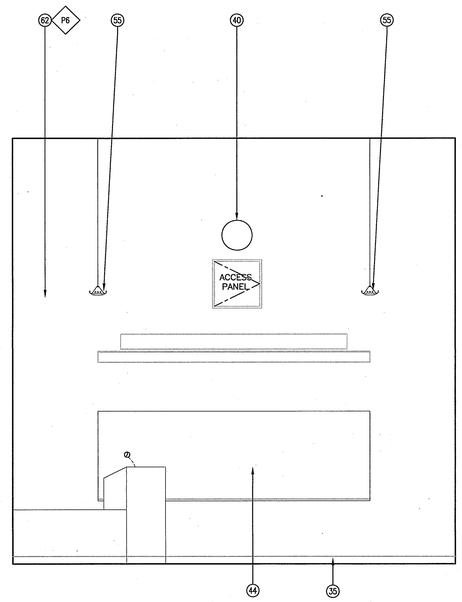

3

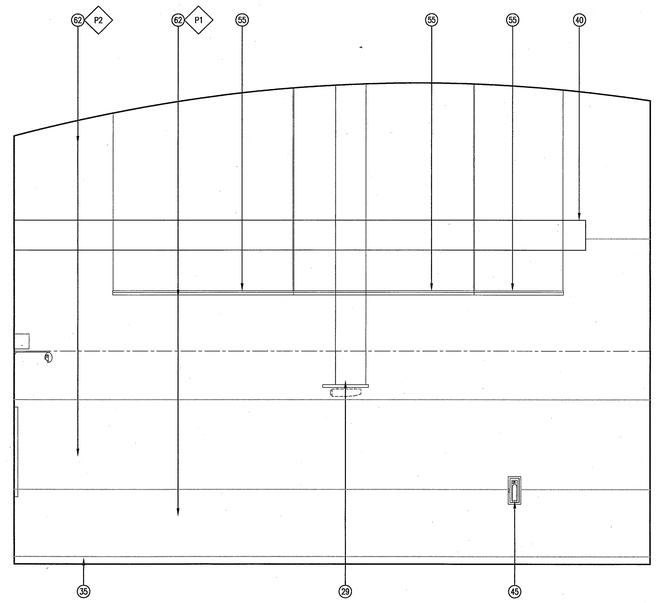

4

CLASSROOM 120, 121, 122 & 123 - BUILDING 1

SCALE: 3/8"=1'-0" | 120

KEYNOTES

1. 4" TOE KICK.
2. UPPER CASEWORK. SEE DETAIL 31/A-7.2. PROVIDE BACKING PLATE. SEE DETAIL 13/A-7.2
3. LOWER CASEWORK. SEE DETAILS 18/A-7.2 & 31/A-7.2
4. PLASTIC LAMINATE OPEN SHELVING WITH ADJUSTIBLE SHELVING. PROVIDE BACKING PLATE. SEE DETAIL 13/A-7.2
5. GRIPLOCK ART DISPLAY SYSTEM (800) 566-0064 WITH TOP AND BOTTOM TRACK WITH COVER AND END CAPS. 11 CABLES WITH TENSIONERS, 8 SIDE CLAMPS PER CABLE, FOR EACH SIDE OF WALL.
6. COUNTERTOPS. SEE FINISH SCHEDULE.
7. 6" BASKSPLASH TO MATCH COUNTERTOP.
8. SINK. SEE PLUMBING DRAWINGS
9. STAINLESS STEEL DISHWASHER
10. REFRIGERATOR
11. SURFACE MOUNTED SOAP DISPENSER. SEE ACCESSORIES SCHEDULE 3/A-2.1.5, 3/A-2.2.6, 8/A-2.3.8 & 7/A-2.4.1
12. MIRROR. SEE ACCESSORIES SCHEDULE 3/A-2.1.5, 3/A-2.2.6, 8/A-2.3.8 & 7/A-2.4.1
13. CUSTOM MIRROR. SEE DETAIL 7/A-7.10
14. GRAB BAR. SEE ACCESSORIES SCHEDULE 3/A-2.1.5, 3/A-2.2.6, 8/A-2.3.8 & 7/A-2.4.1
15. SHOWER ROD HOOKS & CURTAIN. SEE ACCESSORIES SCHEDULE 8/A-2.3.8
16. 30" DEEP WORK BENCH WITH 2" BUTCHER BLOCK TOP. SEE DETAIL 32/A-7.2 SIM.
17. ROBE HOOKS. SEE ACCESSORIES SCHEDULE: 8/A-2.3.8
18. CLOTHES HOOK & BUMPER. SEE ACCESSORIES SCHEDULE 3/A-2.1.5, 3/A-2.2.6, 8/A-2.3.8 & 7/A-2.4.1
19. TOILET. SEE PLUMBING DRAWINGS
20. URINAL. SEE PLUMBING DRAWINGS
21. URNAL SCREEN. SEE ACCESSORIES SCHEDULE 3/A-2.1.5 & 3/A-2.2.6
22. PARTITION. SEE ACCESSORIES SCHEDULE 3/A-2.1.5 & 3/A-2.2.6
23. TOWEL BAR. SEE ACCESSORIES SCHEDULE 8/A-2.3.8
24. TOILET PAPER HOLDER. SEE ACCESSORIES SCHEDULE 8/A-2.3.8
25. RECESSED TOILET PAPER – SEAT COVER & NAPKIN DISPOSAL. SEE ACCESSORIES SCHEDULE 3/A-2.1.5, 3/A-2.2.6 & 8/A-2.3.8
26. SURFACE MOUNTED TOILET PAPER DISPENSER. SEE ACCESSORIES SCHEDULE 3/A-2.1.5 & 7/A-2.4.1
27. SURFACE MOUNTED TOILET SEAT COVER DISPENSER. SEE ACCESSORIES SCHEDULE 3/A-2.1.5 & 7/A-2.4.1
28. RECESSED TOILET PAPER & SEAT COVER DISPENSER. SEE ACCESSORIES SCHEDULE 3/A-2.1.5 & 3/A-2.2.6
29. SUSPENDED PROJECTOR MOUNTING HEIGHT PER AV CONSULTANT.
30. RECESSED PAPER TOWEL DISPENSER & DISPOSAL. SEE ACCESSORIES SCHEDULE 3/A-2.1.5, 3/A-2.2.6, 8/A-2.3.8 & 7/A-2.4.1
31. MOP SINK – REFER TO PLUMBING DRAWINGS.
32. SHELF W/ MOP & BROOM HOLDERS & RAG HOOKS. SEE ACCESSORIES SCHEDULE 3/A-2.1.5, 3/A-2.2.6, 8/A-2.3.8 & 7/A-2.4.1
33. PLASTIC LAMINATE FACED LOCKERS, OWNER FURNISH, VENDOR INSTALLED. FOR HANDICAP ACCESSIBLE SEE DETAIL 17/A-0.5. SEE FINISH SCHEDULE A-6.3.1
34. 6" COVE BASE
35. 4" TOPSET RUBBER BASE
36. BAMBOO BASE. SEE FINISH SCHEDULE A-6.2.1 & A-6.3.1, W1.
37. COUNTER SUPPORT BRACKET. SEE DETAIL 32/A-7.2.
38. SCULPTURED MDF WALL. SEE DETAIL 10/ A-7.10. SEE FINISH SCHEDULE A-6.2.1 & A-6.3.1
39. KALWALL SYSTEM
40. DUCTSOX. SEE MECHANICAL DRAWINGS.
41. ADHESIVE FILM OVER 3/8" TEMPERED GLASS. METROPOLITAN WEST; SEASCAPE
42. WOOD WALL. SEE FINISH SCHEDULE A-6.2.1 & A-6.3.1. INSTALL OVER 3/4" PLYWOOD SUBSTRATE.
43. STOREFRONT DOORS/WINDOWS. SEE DOOR SCHEDULE.
44. EGAN TEAMBOARD. MOUNTING HEIGHT
45. FIRE EXTINGUISHER. SEE DETAIL 15/A-7.2– SURFACE MOUNTED.
46. CUSTOM MILWORK BEDSIDE TABLE. SEE DETAILS 1/A-7.10 & 8/A-7.10.
47. CUSTOM CASEWORK
48. ROOF ACCESS LADDER
49. WARDROBE. SEE DETAIL 16/A-7.10. SEE FINISH SCHEDULE A-6.3.1
50. PORCELAIN TILE. SEE FINISH SCHEDULE.
51. GLASS TILE. SEE FINISH SCHEDULE.
52. ELECTRIC CONTROLLED PROJECTOR SCREEN.
53. CERAMIC TILE. SEE FINISH SCHEDULE.
54. DRINKING FOUNTAIN. SEE PLUMBING DRAWINGS.
55. LIGHT FIXTURE. SEE ELECTRICAL DRAWINGS.
56. PLYBOO STAIR TREADS AND RISER. SEE FINISH SCHEDULE W7
57. PLYBOO SHELVING. SEE DETAIL 2/A-7.10
58. PLASTIC LAMINATE: SEE FINISH SCHEDULE.
59. METAL. SEE FINISH SCHEDULE: MT.
60. LACQUER FINISH. SEE FINISH SCHEDULE.
61. SEE DOOR SCHEDULE.
62. PAINTED FINISH. SEE FINISH SCHEDULE.
63. TEMPERED GLASS. SEE DOOR SCHEDULE.
64. HARDWIRED LED CABDLES, 4"X8" WAX PILLARS, COLOR: DUNES (DU) PATHFINDER PRODUCTS (949) 631-5600 OR bill@pathfinderproductsintl.com
65. CONCRETE PAD
66. WOOD BASE PAINTED TO MATCH WALL
67. RECESSED SANITARY NAPKIN TAMPON VENDOR. SEE ACCESSORIES SCHEDULE. 3/A-2.1.5, 3/A-2.2.6, 8/A-2.3.8 & 7/A-2.4.1
68. LAVATORY. SEE DETAIL 1/A-7.5
69. PLYBOO LOW WALL. SEE DETAIL 11/A-7.10 SEE FINISH SCHEDULE.
70. PLYBOO PANEL. SEE DETAILS 16 A/-7.9 & 17/A-7.9. SEE FINISH SCHEDULE.
71. MOBILE BOOKCASES. SEE DETAIL 14/A-7.10
72. CHECK IN KIOSK.
73. BUILT-IN BOOKCASES.
74. ELECTRIC WATER HEATER SET ON AND ATTACHED TO CABINET BOTTOM PANEL.
75. FAN COIL UNIT. SEE DETAIL 4/M-3.2
76. CHAIRRAIL
77. PROVIDE GRIPLOCK SHELVING SYSTEM, (800) 566-0064 CEILING TO FLOOR (COUNTER) WITH GLASS SHELVES.
78. PLYBOO TABLE. SEE DETAIL 4/A-7.10
79. WHITEBOARD

KEY PLAN

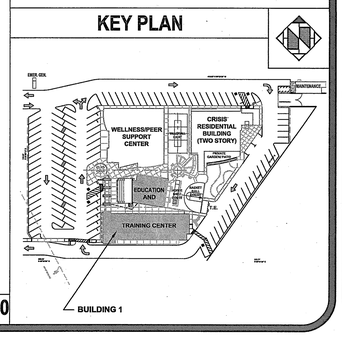

County of Orange
OC PUBLIC WORKS
Architecture & Engineering

Revisions			
Sym.	Descrip.	Date	By

0742

Consultants

Drawn | Chkd. | Date

A-E Seal

A-E ALEXANDER + HIBBS, AIA, INC.

ALEXANDER + HIBBS AIA, INC.
Architecture and Planning
1300 N. Grand Avenue
Santa Ana, California
(714) 835-0668 92507

Design DF | Chkd. AH | Date Nov. 26, 2009

Sht Title BUILDING 1- INTERIOR ELEVATION

Project COUNTY OF ORANGE HEALTH CARE AGENCY
401 SOUTH TUSTIN STREET
401 SOUTH TUSTIN STREET
ORANGE, CA 92866

PROJ. NO. 100-042-P210-4200

Plan No.
52333-03608

Sheet
A-5.1.6

0742 COUNTY OF ORANGE HEALTH CARE AGENCY 401 SOUTH TUSTIN STREET