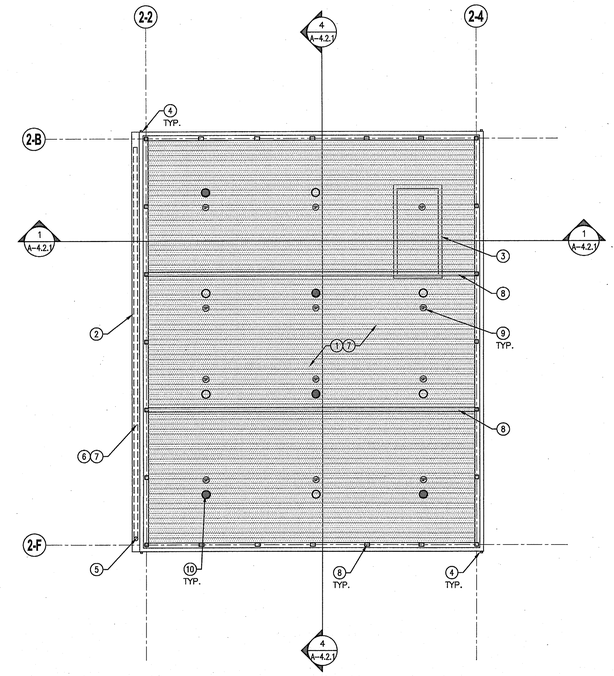

BUILDING 2 - CLEARSTORY REFLECTED CEILING PLAN

SCALE: 1/8"=1'-0" | 1

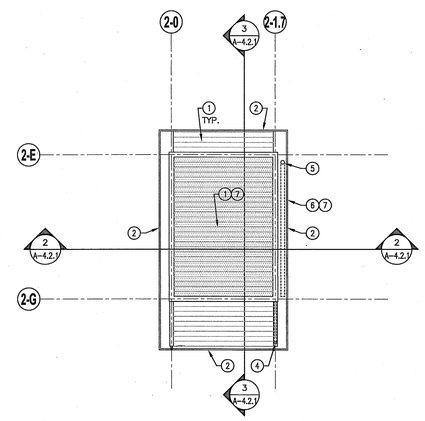

BUILDING 2 - TOWER REFLECTED CEILING PLAN

SCALE: 1/8"=1'-0" | 2

KEYNOTES

1. EXPOSED EPIC DECK CEILING. SEE FINISH SCHEDULE FOR FINISH.
2. EDGE OF ROOF OVERHANG ABOVE
3. ALUMINUM CURTAINWALL SYSTEM WITH 2 3/4" KALWALL.
4. ROOF DRAIN LEADER.
5. EXPOSED FIRE SPRINKLER RISER.
6. METAL SOFFIT.
7. FIRE SPRINKLER LINE ENCLOSED WITHIN METAL SOFFIT, AND WITH IN EPIC DECK, SEE DETAIL 34/A-7.3.
8. EXPOSE STRUCTURAL SYSTEM – REFER TO STRUCTURAL DRAWINGS. SEE FINISH SCHEDULE FOR FINISH.
9. SPEAKER SYSTEM WIRING TO BE WITHIN EPIC DECK SYSTEM, SEE DETAIL 34/A-7.3.
10. SUSPENDED LIGHT FIXTURE, REFER TO ELECTRICAL DRAWINGS. FOR HANGER ATTACHEDMENT SEE DETAIL 35/A-7.3.

GENERAL NOTES:

A. ELECTRICAL CONDUIT TO BE WITHIN EPIC DECK CAVITY. SEE DETAIL 34/A-7.3.

B. FIRE SPRINKLER LINE TO BE WITHIN EPIC DECK CAVITY. SEE DETAIL 34/A-7.3.

CEILING LEGEND

NOTES:

1. FOR ALL LIGHT FIXTURES, REFER TO ELECTRICAL DRAWINGS
2. FOR ALL MECHANICAL COMPONENTS, REFER TO MECHANICAL DRAWINGS

- 2'-0" x 2'-0" SUSPENDED ACOUSTIC TILE CEILING SEE PLAN FOR HEIGHT SEE DETAILS 11, 12, 15,16 & 17 / A-7.3
- 5/8" GYPSUM BOARD CEILING OVER METAL FRAMING, SEE PLAN FOR HEIGHT SEE DETAILS 6 & 7 / A-7.3. U.N.O.
- EPIC CEILING OVER METAL FRAMING. SEE EXTERIOR ELEVATION FOR HEIGHT.
- WOOD CEILING OVER METAL FRAMING.
- +9'-0" CEILING HEIGHT (FROM TOP OF SLAB)
- RECESSED 2'x4' FLUORESCENT LIGHT FIXTURE SEE ELECTICAL DRAWINGS
- CONTINUOUS RECESSED FLUORESCENT LIGHT FIXTURE SEE ELECTICAL DRAWINGS
- SURFACED MOUNTED FLUORESCENT LIGHT FIXTURE. SEE ELECTRICAL DRAWINGS
- SURFACED MOUNTED STRIP FLUORESCENT LIGHT FIXTURE. SEE ELECTRICAL DRAWINGS
- SUSPENDED FLUORESCENT LIGHT FIXTURE. SEE ELECTRICAL DRAWINGS
- WALL MOUNTED FLUORESCENT LIGHT FIXTURE. SEE ELECTRICAL DRAWINGS
- SURFACE MOUNTED FLUORESCENT LIGHT FIXTURE. SEE ELECTRICAL DRAWINGS
- RECESSED CAN FLUORESCENT DOWN-LIGHT FIXTURE 6" ROUND. SEE ELECTRICAL DRAWINGS
- RECESSED CAN FLUORESCENT DOWN-LIGHT FIXTURE 4.5" ROUND. SEE ELECTRICAL DRAWINGS
- SUSPENDED LIGHT FIXTURE. SEE ELECTRICAL DRAWINGS
- WALL MOUNTED LIGHT FIXTURE. SEE ELECTRICAL DRAWINGS
- WALL MOUNTED LIGHT FIXTURE. SEE ELECTRICAL DRAWINGS
- RECESSED WALL WASHER – UP LIGHT FIXTURE. SEE ELECTRICAL DRAWINGS
- WALL MOUNTED FLUORESCENT LIGHT FIXTURE. SEE ELECTRICAL DRAWINGS
- SP SURFACE MOUNTED SPEAKER
- MECHANICAL SUPPLY AIR DIFFUSER SEE MECHANICAL DRAWINGS
- MECHANICAL RETURN AIR DIFFUSER SEE MECHANICAL DRAWINGS
- MECHANICAL EXHAUST FAN GRILL REFER TO MECHANICAL DRAWINGS
- MECHANICAL EXHAUST FAN CEILING MOUNTED – REFER TO MECHANICAL DRAWINGS
- MECHANICAL SUPPLY AIR DIFFUSER LINEAR SEE MECHANICAL DRAWINGS
- MECHANICAL SUPPLY AIR DUCTSOX – SEE MECHANICAL DRAWINGS

KEY PLAN

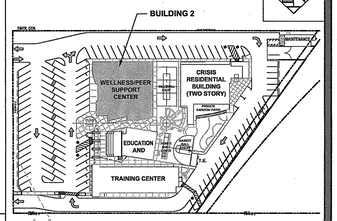

0742 COUNTY OF ORANGE HEALTH CARE AGENCY 401 SOUTH TUSTIN STREET

County of Orange
OC PUBLIC WORKS
Architecture & Engineering

Revisions			
Sym.	Descrip.	Date	By
0742			

Consultants

Drawn ___ Chkd. ___ Date ___

A-E Seal

LICENSED ARCHITECT ALEXANDER + HIBBS
RENEWAL 11/30/2011
STATE OF CALIFORNIA

A-E ALEXANDER + HIBBS, AIA, INC.

ALEXANDER + HIBBS, AIA, INC.
Architecture and Planning
3161 Michelson Drive, Suite 1
Irvine, California 92612
(714) 752-7000

Design DF | Chkd. AH | Date Nov. 26, 2009

Sht Title BUILDING 2 - CLEARSTORY AND TOWER REFLECTED CEILING PLANS

Project COUNTY OF ORANGE HEALTH CARE AGENCY
401 SOUTH TUSTIN STREET
401 SOUTH TUSTIN STREET
ORANGE, CA 92866

PROJ. NO. 100-042-P210-4200

Plan No.
52333-03608

Sheet
A-2.2.4